PUBLIC WORKS DIRECTOR

3/7/06

PLANS APPROVAL DATE

The County of Contra Costa or its officers or agents shall not be responsible for the accuracy or completeness of electronic copies of this plan sheet.

REGISTERED PROFESSIONAL ENGINEER MAURICE M. SHIU No. 23204 Exp. 12/31/95 CIVIL STATE OF CALIFORNIA

07

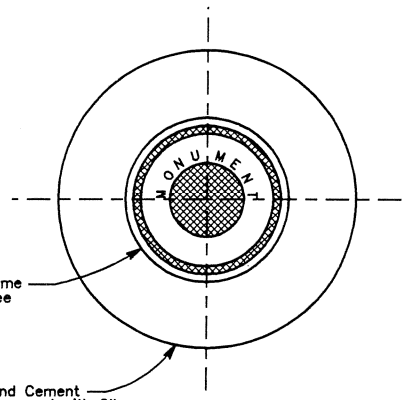

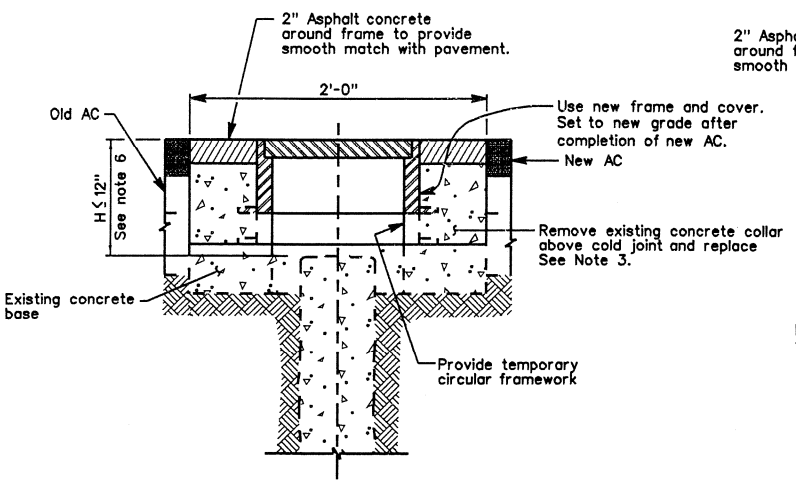

FRAME ADJUSTMENT DETAIL

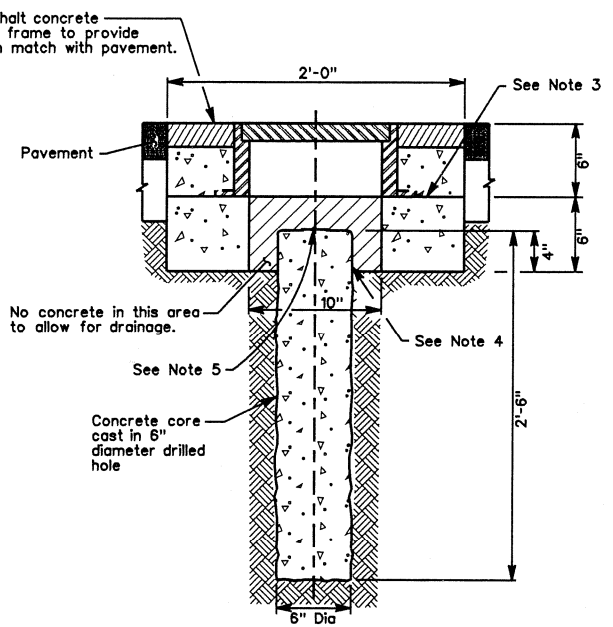

NEW INSTALLATION DETAIL

NOTES:

1. Portland cement concrete for jacket and core shall be Class 2 (590 lb. PC per cubic yard) with 3/4" maximum aggregate max-medium grading. ◇2
2. Approved covers and frames are those manufactured by Chrisp Casting, Part No. 9277M or 9279 or approved equivalent. Covers shall be marked "Monument" shall be non-rocking and designed for a 15000 lb. wheel load.
3. 30# felt or 1/4" layer of sand to create a "cold joint"
4. 6" diameter collar formed with 30# felt.
5. Solid brass marker (1 3/8" diameter top and 7/16" x 2" shank) with distinctive punch and R.E. or L.S. number.
6. When "H" exceeds 12", a complete reconstruction of monument is required.

NO.	DATE	REVISION DESCRIPTION	BY
◇1	2-02	Supersedes Standard Plan CA40	P.W.
		dated 11-99	
◇2	7-02	Concrete Spec. Revision	HH
◇3	1-06	Var. Revisions, especially	LC
		adjustments	

COUNTY OF CONTRA COSTA
PUBLIC WORKS DEPARTMENT
MARTINEZ, CALIFORNIA

STANDARD PLAN

STREET SURVEY MONUMENT

SCALE: NO SCALE | DATE: 2-02
DRAWN BY: L.COSTA | PLAN NO. CA40i
CHECKED BY: R. Zwemmer

STD. PLAN CA40i