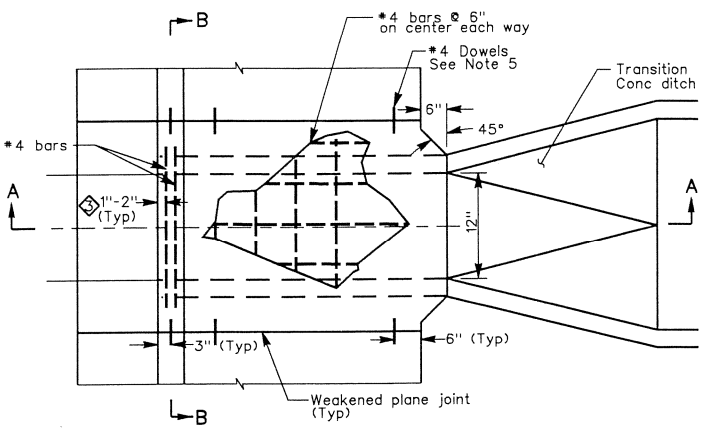

SIDEWALK CROSS DRAIN (SCD) WITH CONCRETE DITCH

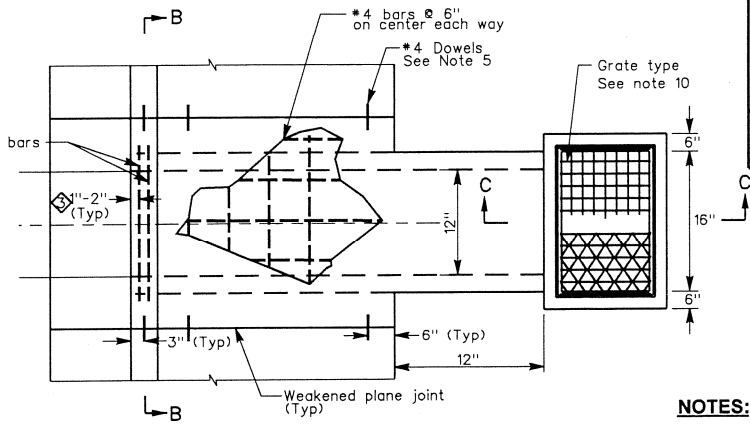

SCD WITH AREA DRAIN

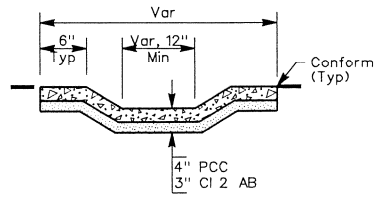

CONCRETE DITCH

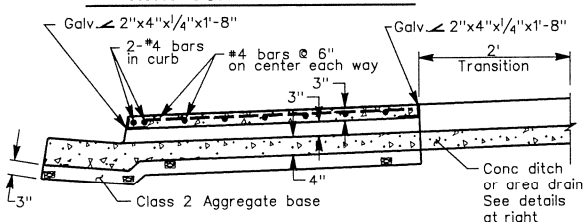

SECTION A-A

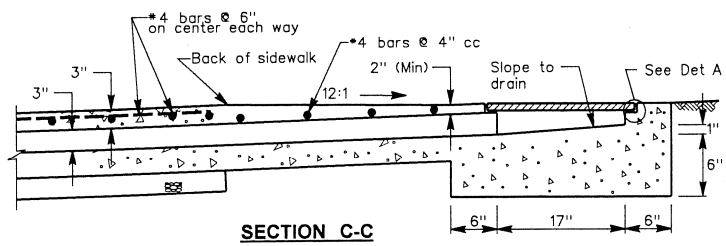

SECTION C-C

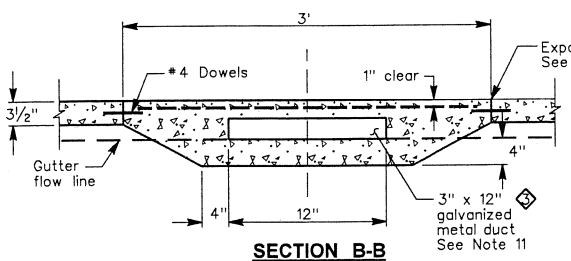

SECTION B-B

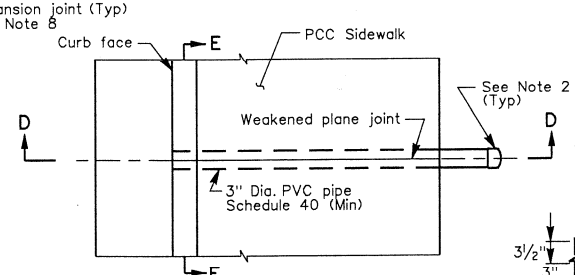

RESIDENTIAL SIDEWALK DRAIN

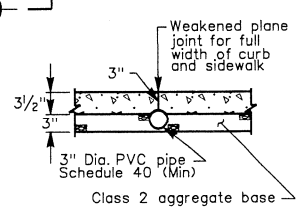

SECTION E-E

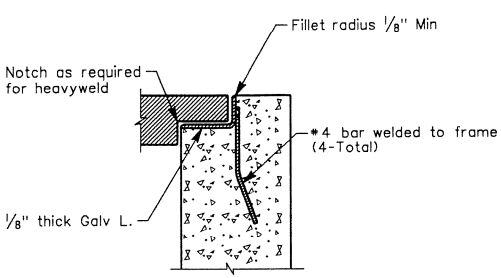

DETAIL A

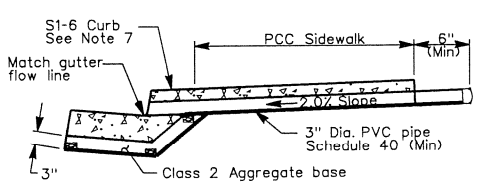

SECTION D-D

NOTES:

1. Class 3 Portland Cement Concrete (505 lb. PC per cu. yard) shall be used for all concrete construction detailed on this plan. 2
2. PVC pipe shall be capped if drain connection will be made at a later date.
3. See Standard Plan CA70i "Detail A" for weakened plane joint.
4. All sidewalk drains which conform to existing facilities shall be doweled as shown. Dowels shall be placed in a 1" drilled hole filled with 1:1 sand cement grout.
5. Concrete removed for construction of sidewalk drains shall be sawcut to a neat line at the weakened plane joint or scoremark nearest to the full width of the sidewalk or residential drain. New concrete shall be doweled to existing as per Standard Plan CA74i.
6. Drain may be skewed as directed by the Public Works Department.
7. See Standard Plan CA71i for S1-6 curb detail.
8. See Standard Plan CA70i for expansion joint details.
9. For additional capacity adjacent drains may be installed and the with of inlet shall be increased as required. Minimum clearance between drains at curb face shall be 6". Adjacent drains shall be the same type.
10. In traffic areas, the grate shall be Irving "Heavyweld" with end band as recommended by the manufacturer, or approved alternate.
    In non-traffic areas, the grate shall be Irving "Reticulene" Aluminum Type WH with end band (bearing bar thickness-3/16"). or approved alternate. Each grate shall be provided with a minimum of 2 Irving Type C fasteners or approved alternate.
11. Metal duct form shall be supported from distortion during pouring of concrete. Collapsible removable form may be used in lieu of 19 GA. metal duct.

PUBLIC WORKS DIRECTOR
10-26-06
PLANS APPROVAL DATE

The County of Contra Costa or its officers or agents shall not be responsible for the accuracy or completeness of electronic copies of this plan sheet.

REGISTERED PROFESSIONAL ENGINEER — MAURICE M. SHIU — No. 23204 — Exp. 12/31/07 — CIVIL — STATE OF CALIFORNIA

NO.	DATE	REVISION DESCRIPTION	BY
1	2-02	Supersedes Standard Plan CD06	P.W.
		dated 11-99	
2	7-02	Concrete Spec. Revision	HH
3	12-04	Dimension correction	

COUNTY OF CONTRA COSTA
PUBLIC WORKS DEPARTMENT
MARTINEZ, CALIFORNIA

STANDARD PLAN

SIDEWALK CROSS DRAIN & RESIDENTIAL SIDEWALK DRAIN

SCALE: NO SCALE | DATE: 7-02
DRAWN BY: H.HUSSEY | PLAN NO. CD06i
CHECKED BY: M. HOLLINGSWORTH

STD. PLAN CD06i