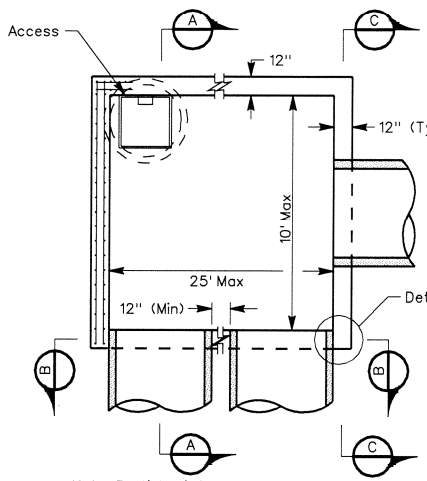

Note: Partial reinforcement shown

PLAN

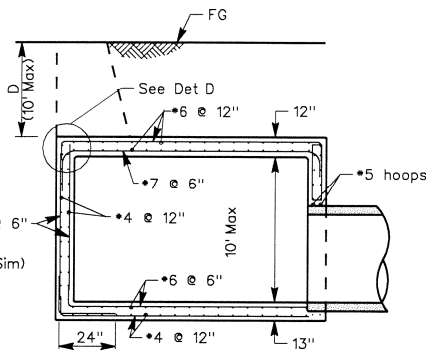

SECTION A-A

NOTE: Section A-A steel is structurally designed and limited to a 10' internal span.

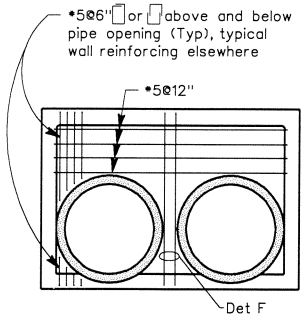

Note: Partial reinforcement shown

SECTION B-B

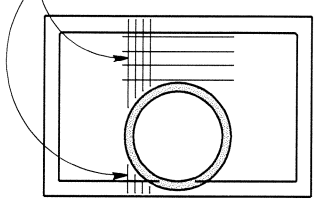

Note: Partial reinforcement shown

SECTION C-C

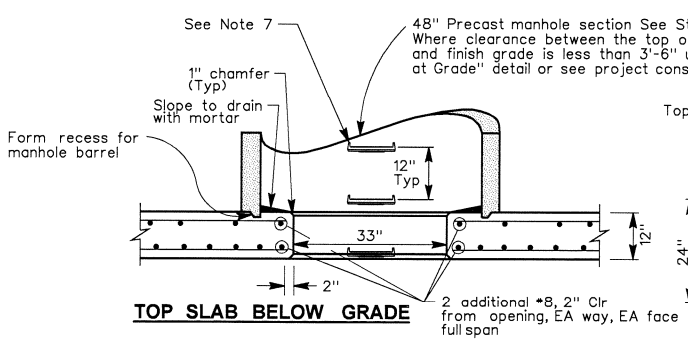

TOP SLAB BELOW GRADE

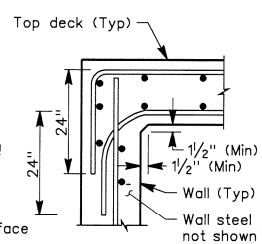

DETAIL D

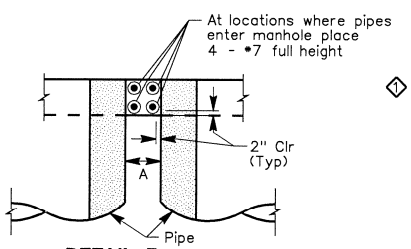

DETAIL F

A = 8" (Min)
When A>12" use Std wall reinforcing between vertical *7's

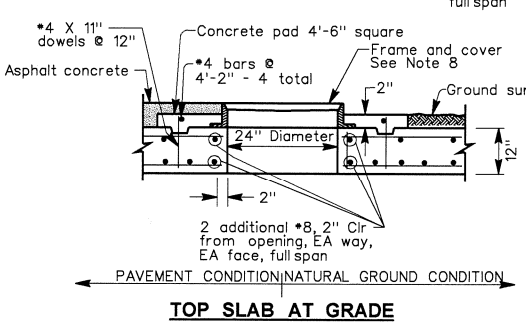

TOP SLAB AT GRADE

NOTES:

1. Soil parameters used for design are limited to the following:
   Active equivalent fluid pressure of 45 lbs./ft³ up to a saturated condition of 62 lbs./ft³.
   Passive equivalent fluid pressure of 300 lbs./ft³.
   Structures to be constructed in soils not exhibiting these characteristics shall be designed by a registered professional engineer under consultation with a registered geotechnical engineer.
2. Interior wall height shall not exceed 10 feet
3. Depth to top of deck "D" shall not exceed 10 feet
4. ⟨1⟩ Minimum Strength:
   Steel: f'_y=60000 psi
   PCC: f'_c=3000 psi
5. Reinforcing steel placement shall be as directed in American Concrete Institute, Building Code and Commentary 318-95.
6. Inlet and outlet pipes shall not intercept a manhole base through a corner. If skew angle is too great to permit the opening to be made through a single wall a special design will be required.
7. Step shall be steel reinforced polypropylene plastic, Santa Rosa Cast Products Co. Dwg. No.PS2-PF or equivalent. Steps to be cast in place or press fitted into provided holes as per manufacturer. Install steps with lowest rung 1'-0" above the floor and highest rung no more than 6" below top of manhole. The spacing between steps shall be uniform throughout the length of the wall. Place steps in the wall without an opening. No steps required where distance from floor of manhole to top of manhole is less than 2'-6". See Standard Plan CD30i for step detail.
8. For details of manhole frame and cover, see Standard Plan CD30i.

PUBLIC WORKS DIRECTOR
10-26-06
PLANS APPROVAL DATE

The County of Contra Costa or its officers or agents shall not be responsible for the accuracy or completeness of electronic copies of this plan sheet.

REGISTERED PROFESSIONAL ENGINEER — MAURICE M. SHIU — No. 23204 — Exp. 12/31/07 — CIVIL — STATE OF CALIFORNIA

NO.	DATE	REVISION DESCRIPTION	BY
⟨1⟩	2-04	Revised Note	M.H.

COUNTY OF CONTRA COSTA
PUBLIC WORKS DEPARTMENT
MARTINEZ, CALIFORNIA

STANDARD PLAN

TYPE V MANHOLE BASE

SCALE: NO SCALE | DATE: 2-02
DRAWN BY: P.WARDEN | PLAN NO. CD34i
CHECKED BY: M. HOLLINGSWORTH

STD. PLAN CD34