UPPER HESS CREEK HABITAT RESTORATION

Kirker Pass Road
(Contra Costa County, California)

Know what's below. Call 811 before you dig.

VICINITY MAP:

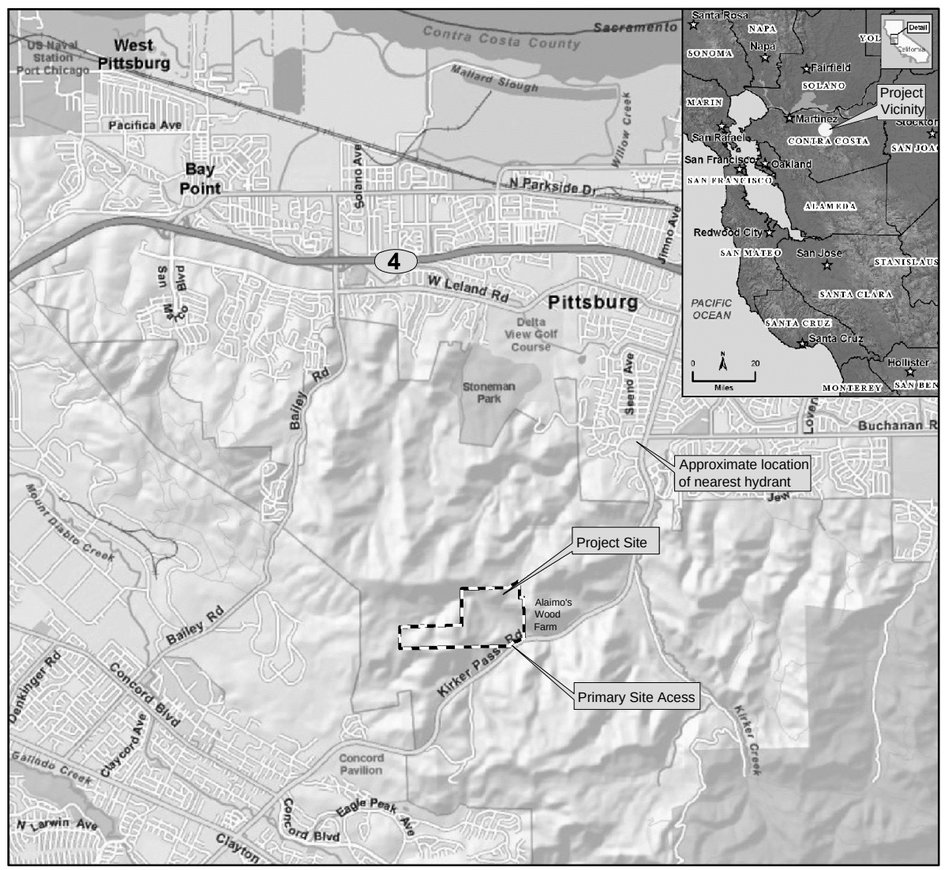

ACCESS NOTES:

KIRKER PASS ROAD IS A DIVIDED HIGHWAY. ACCESS TO THE SITE IS ONLY AVAILABLE FROM TRAFFIC HEADED IN THE SOUTH-BOUND DIRECTION. THE PROJECT SITE IS LOCATED APPROXIMATELY 2 MILES FROM PITTSBURG CITY LIMITS AND 3,000 FEET FROM ALAIMO'S WOOD FARM ENTRANCE. SEE SHEET L3.0 FOR SITE ACCESS.

PREPARED FOR:

East Contra Costa County Habitat Conservancy

East Contra Costa County
Habitat Conservancy
651 Pine Street,
4th Floor, North Wing
Martinez, CA 94553

East Bay Regional Park District

East Bay Regional Park District
2950 Peralta Oaks Court
Oakland, CA 94605

CONSULTANTS:

Ecological Consultants / Landscape Architects
H.T. Harvey & Associates
983 University Avenue, Building D
Los Gatos, CA 95032

Hydrology Consultants
Balance Hydrologics, Inc.
800 Bancroft Way, Suite 101
Berkeley, CA 94710

APPROVED BY:

DIANNE ALTHOFF
CHIEF OF DESIGN AND CONSTRUCTION
EAST BAY REGIONAL PARK DISTRICT

DATE

JEFF WILSON
CHIEF OF OPERATIONS
EAST BAY REGIONAL PARK DISTRICT

DATE

DRAWING INDEX:

L0.0 - Cover Sheet
L1.0 - General Notes
L2.0 - Key Plan
L3.0 - Site Access & Protection Plan
L3.1 - Temporary Fence Details
L4.0 - Debris Removal & Salvage
L5.0 - Grading Plan - CTS Pond
L5.1 - Grading Details - CTS Pond
L5.2 - Grading Plan - Upper Stock Pond & Ranch Road Crossing
L5.3 - Grading Details - Upper Stock Pond & Ranch Road Crossing
L5.4 - Grading Plan - Channel Restoration Area & Main Stock Pond
L5.5 - Grading Details - Channel Restoration Area & Main Stock Pond
L5.6 - Grading Details - Channel Restoration Area & Main Stock Pond
L5.7 - Grading Plan - Alluvial Valley
L5.8 - Grading Detail (1) - Alluvial Valley
L5.9 - Grading Plan - Alluvial Valley (Sub-Grade Layout)
L5.10 - Grading Details (2) - Alluvial Valley
L5.11 - Grading Details (3) - Alluvial Valley
L5.12 - Grading Plan - Alluvial Valley (Micro-Topography)
L5.13 - Grading Plan - Clay Borrow Area
L5.14 - General Grading Details
L5.15 - Habitat Feature Details
L6.0 - Site Installation & Cattle Exclusion Fence Plan
L6.1 - Cattle Exclusion Fence Details
L7.0 - Seeding Plan - CTS Pond
L7.1 - Seeding Plan - Upper Stock Pond & Ranch Road Crossing
L7.2 - Seeding Plan - Channel Restoration Area & Main Stock Pond
L7.3 - Seeding Plan - Alluvial Valley
L7.4 - Seeding Plan - Clay Borrow Area
L7.5 - Seeding Plan - Additional Project Staging Area

30 TOTAL SHEETS

H. T. HARVEY & ASSOCIATES ECOLOGICAL CONSULTANTS

HYDROLOGIC CONSULTANTS Balance Hydrologics, Inc.

REVISIONS	DATE

APPROVED BY REGISTERED LANDSCAPE ARCHITECT JOSEPH M. HOWARD 4598 Exp. 12/31/12 STATE OF CALIFORNIA

East Bay Regional Park District
2950 Peralta Oaks Court
Oakland, CA 94605
P: 888-327-2757

UPPER HESS CREEK RESTORATION PROJECT
East Contra Costa County, California
COVER SHEET

Submittal: BID DOCUMENT
Scale: NTS
Date: 05/23/11
Drawn By: RB,LD,CJ
Checked By: JH,MQ,DS
File No.: 2927-05

SHEET L0.0
1 OF 30 SHEETS

GENERAL NOTES:

1. THE PROJECT AREA IS LOCATED WITHIN AN ACTIVE EPHEMERAL CHANNEL. THE 2008 TOPOGRAPHY SHOWN ON PLANS MAY DIFFER FROM CURRENT CONDITIONS. CONTRACTOR SHALL BECOME FAMILIAR WITH THE EXISTING CONDITIONS AND FIELD FIT AS NECESSARY TO ACHIEVE PROPOSED DESIGNS.
2. CONTRACTOR SHALL STAY WITHIN THE LIMIT OF WORK, WITH THE EXCEPTION OF CATTLE EXCLUSION FENCE WORK.
3. PROJECT SITE CUT AND FILL IS INTENDED TO BALANCE.
4. CONTRACTOR SHALL CALL 811 AND ALLOW FIELD LOCATION OF ALL UTILITIES BEFORE BEGINNING ANY WORK.

HABITAT SUMMARY

SITE NAME	SEASONAL WETLAND (ACRES)	BREEDING POND (ACRES)	CHANNEL RESTORATION (LINEAR FEET)	OTHER WATERS (LINEAR FEET)
CTS POND		0.12	114	114
UPPER STOCK POND			258	28
RANCH ROAD CROSSING				
CHANNEL RESTORATION AREA	0.05		117	
MAIN STOCK POND	0.10			31
ALLUVIAL VALLEY	2.32			
TOTAL	2.47	0.12	489	173

APPROXIMATE LIMIT OF WORK = 14.5 ACRES
APPROXIMATE FOOTPRINT OF GRADING = 7.4 ACRES

ABBREVIATIONS

APPROX	APPROXIMATELY
DIA	DIAMETER
(E)	EXISTING
EA	EACH
EL.	ELEVATION
ESA	ENVIRONMENTALLY SENSITIVE AREA
FT	FEET
LF	LINEAR FEET
MAX	MAXIMUM
MIN	MINIMUM
TYP.	TYPICAL
W/	WITH
W/OUT	WITHOUT
O.C.	ON CENTER
(N)	NEW
NTS	NOT TO SCALE
CTS	CALIFORNIA TIGER SALAMANDER
SP	SPILL POINT
WEF	SILT/WILDLIFE EXCLUSION FENCE

GRADING LEGEND

- EXISTING TREE CANOPY
- 1118 — 2008 BASE MAP EXISTING 2' CONTOUR
- 1116 — PROPOSED CONTOUR
- INTERPOLATED CONTOUR
- +1052.25 — PROPOSED SPOT ELEVATION
- DAYLIGHT
- +LP 1051.00 — PROPOSED LOW POINT ELEVATION
- +HP 531.3 — PROPOSED HIGH POINT ELEVATION
- +SP 107.25 — PROPOSED SPILL POINT ELEVATION
- SONOTUBE
- LIMIT OF WORK
- PROPOSED RIDGELINE

GENERAL LEGEND

- PROPERTY LINE AND EXISTING FENCE
- PROPOSED CATTLE EXCLUSION FENCE (3 / L6.1)
- ESA — ENVIRONMENTALLY SENSITIVE AREA FENCE (2 / L3.1)
- WEF — SILT / WILDLIFE EXCLUSION FENCE (1 / L3.1)
- LIMIT OF DEBRIS REMOVAL
- PROPOSED METAL GATEWAY (4 / L6.1)
- PROPOSED WIRE GATEWAY (1 / L6.1)
- EXISTING OTHER WATERS / WETLANDS
- EXISTING UTILITY PADDLE MARKER
- PROPOSED ROCK HABITAT PERCH (1 / L5.15)
- PROPOSED COARSE WOODY DEBRIS (2 / L5.15)
- EXISTING MONITORING WELL TO REMOVE
- AREA OF OVER-EXCAVATION AND CLAY IMPORT
- EROSION CONTROL BLANKET. AT CTS POND AREA ALSO INCLUDES OVER-EXCAVATE AND IMPORT CLAY
- INTERLOCKING CONCRETE BLOCKS (2,4,5 / L5.14)
- ALLUVIAL VALLEY SUBGRADE CLAY LAYER
- AREA GRADED FOR RANCH ROAD
- AREA FOR RUT REMOVAL
- NATIVE TRANSITION SEED MIX
- WETLAND SEED MIX

811 Know what's below. Call 811 before you dig.

H. T. HARVEY & ASSOCIATES
ECOLOGICAL CONSULTANTS

REVISIONS	DATE

APPROVED BY
JOSEPH M. HOWARD
REGISTERED LANDSCAPE ARCHITECT
4598
Exp. 12/31/12
STATE OF CALIFORNIA

East Bay Regional Park District
East Bay Regional Park District
2950 Peralta Oaks Court
Oakland, CA 94605
P: 888-327-2757

UPPER HESS CREEK
RESTORATION PROJECT
East Contra Costa County, California
GENERAL NOTES

Submittal: BID DOCUMENT
Scale: NTS
Date: 05/23/11
Drawn By: RB,LD,CJ
Checked By: JH,MQ,DS
File No.: 2927-05

SHEET L1.0
2 OF 30 SHEETS

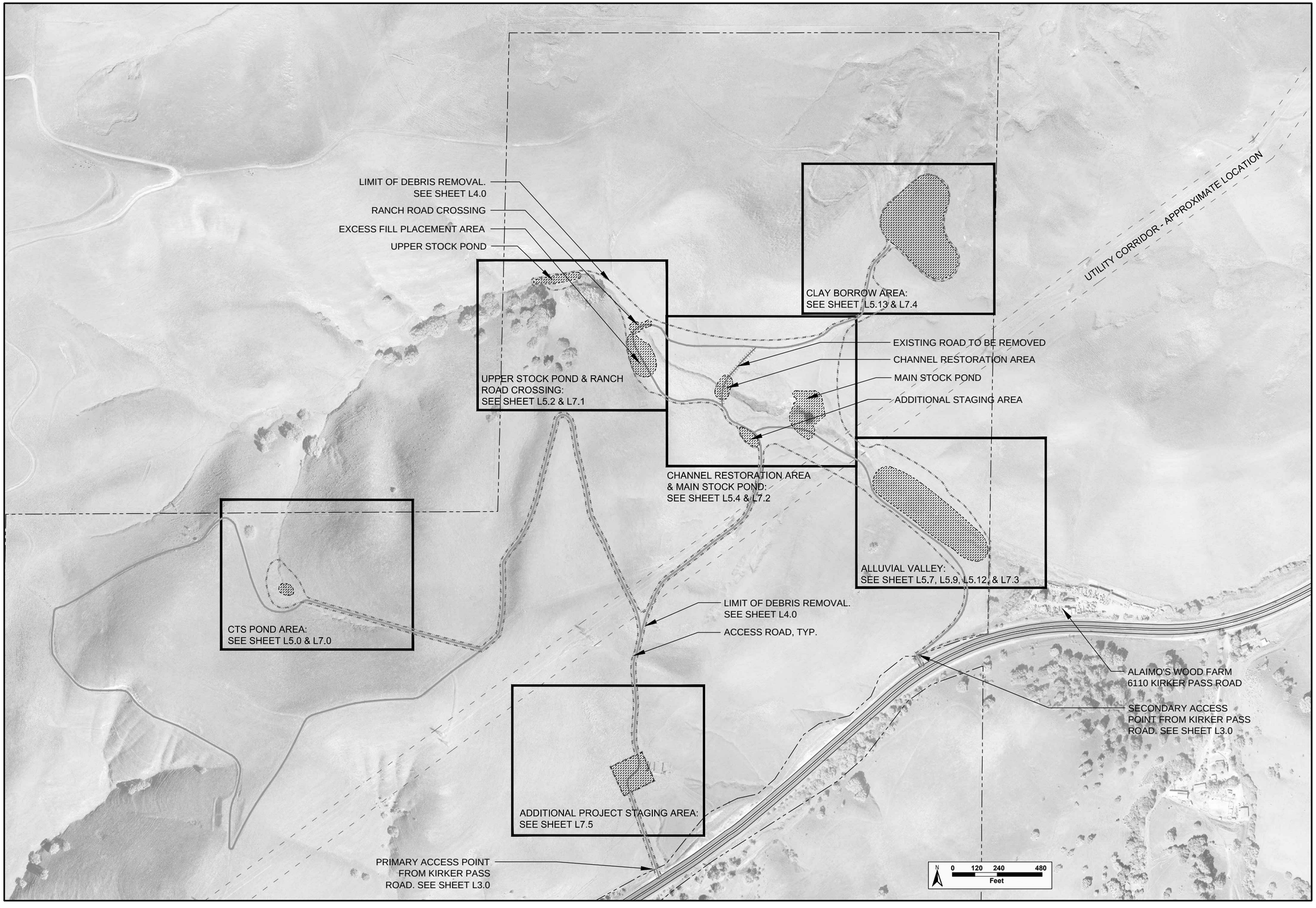

H. T. HARVEY & ASSOCIATES
ECOLOGICAL CONSULTANTS

REVISIONS	DATE

APPROVED BY
REGISTERED LANDSCAPE ARCHITECT
JOSEPH M. HOWARD
4598
Exp. 12/31/12
STATE OF CALIFORNIA

East Bay Regional Park District

East Bay Regional Park District
2950 Peralta Oaks Court
Oakland, CA 94605
P: 888-327-2757

UPPER HESS CREEK
RESTORATION PROJECT

East Contra Costa County, California

KEY PLAN

Submittal: BID DOCUMENT
Scale: see drawing
Date: 05/23/11
Drawn By: RB,LD,CJ
Checked By: JH,MQ,DS
File No.: 2927-05

SHEET **L2.0**
3 OF 30 SHEETS

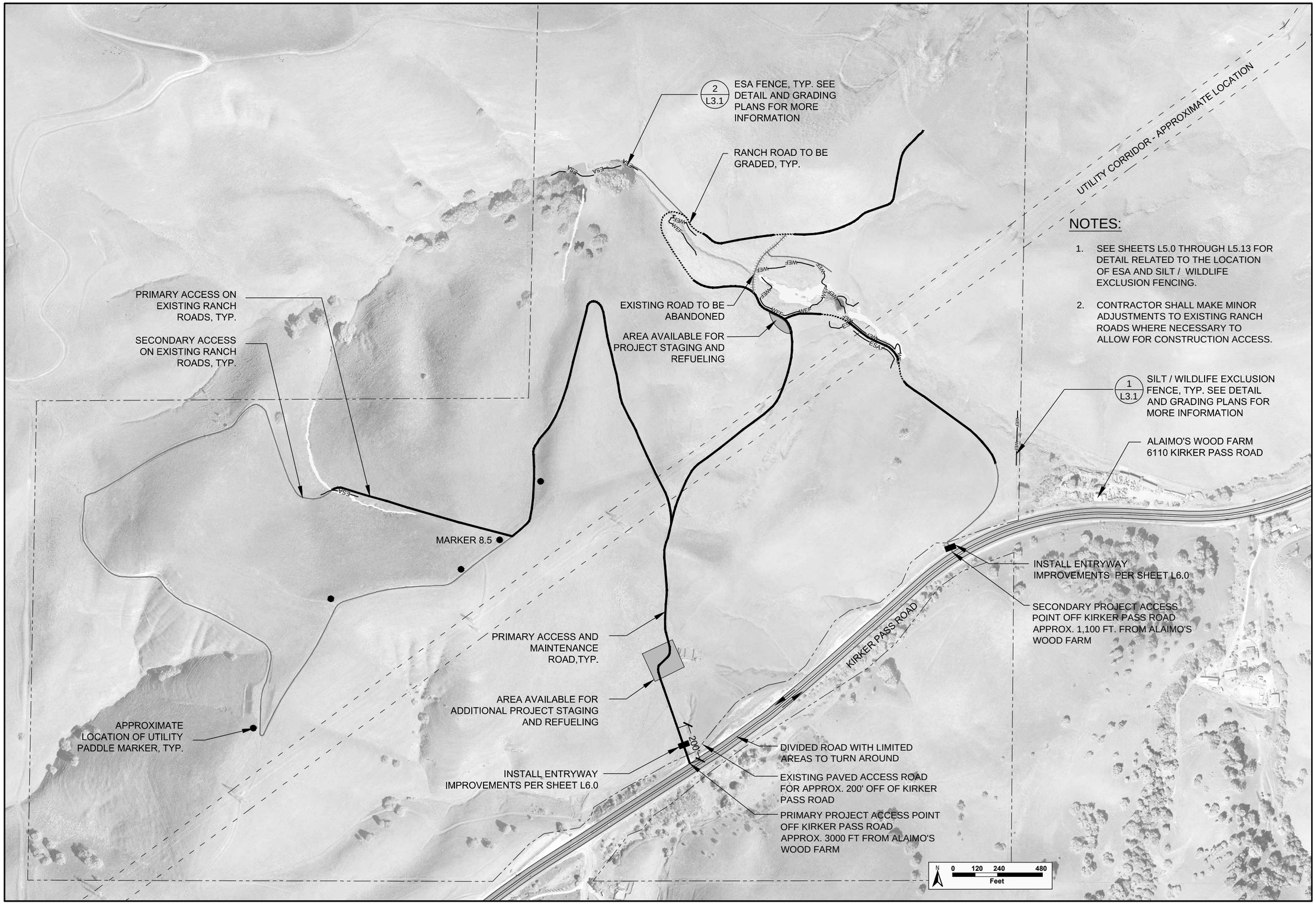

NOTES:

1. SEE SHEETS L5.0 THROUGH L5.13 FOR DETAIL RELATED TO THE LOCATION OF ESA AND SILT / WILDLIFE EXCLUSION FENCING.
2. CONTRACTOR SHALL MAKE MINOR ADJUSTMENTS TO EXISTING RANCH ROADS WHERE NECESSARY TO ALLOW FOR CONSTRUCTION ACCESS.

H. T. HARVEY & ASSOCIATES
ECOLOGICAL CONSULTANTS

REVISIONS	DATE

APPROVED BY
REGISTERED LANDSCAPE ARCHITECT JOSEPH M. EDWARDS 4598 Exp. 12/31/12 STATE OF CALIFORNIA

East Bay Regional Park District
East Bay Regional Park District
2950 Peralta Oaks Court
Oakland, CA 94605
P: 888-327-2757

UPPER HESS CREEK
RESTORATION PROJECT

East Contra Costa County, California

SITE ACCESS & PROTECTION PLAN

Submittal: BID DOCUMENT
Scale: see drawing
Date: 05/23/11
Drawn By: RB,LD,CJ
Checked By: JH,MQ,DS
File No.: 2927-05

SHEET **L3.0**
4 OF 30 SHEETS

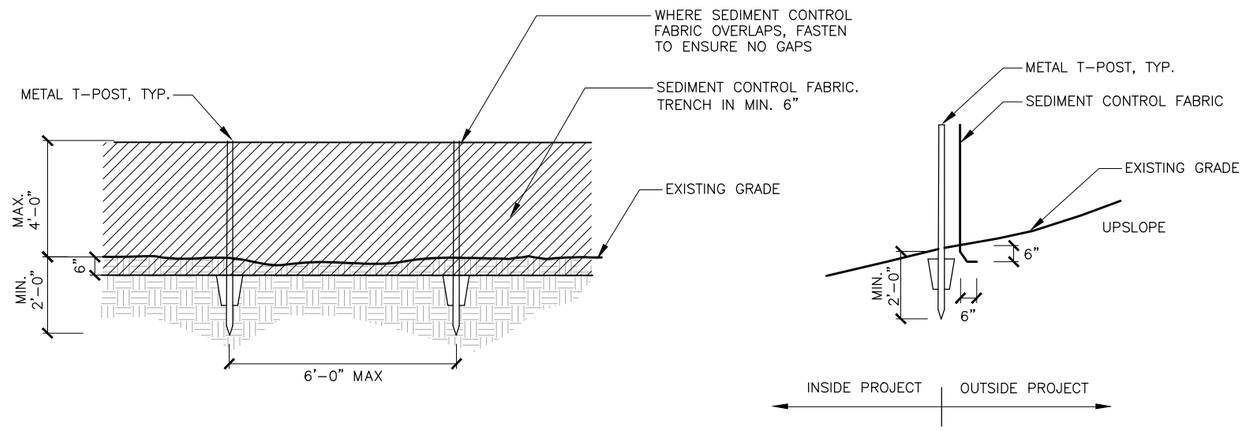

ELEVATION
NTS

SECTION
NTS

1 SILT/WILDLIFE EXCLUSION FENCE

wildlife exclusion fence_24

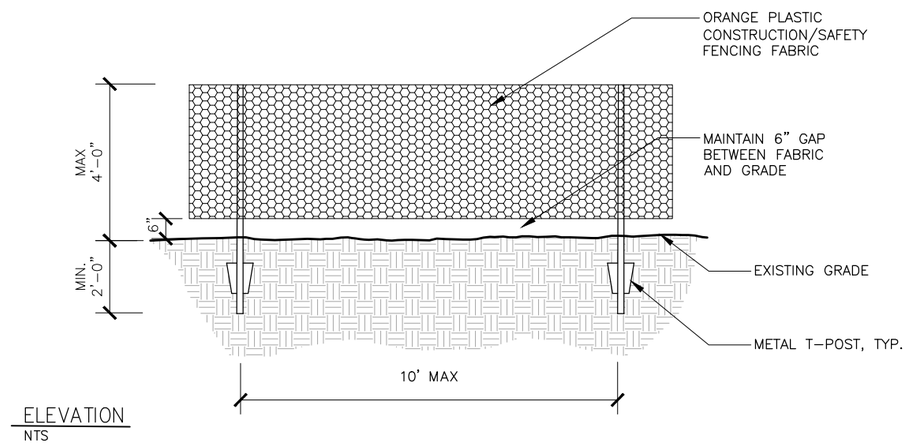

ELEVATION
NTS

2 ESA FENCE

ESA fence_english

H. T. HARVEY & ASSOCIATES
ECOLOGICAL CONSULTANTS

REVISIONS	DATE

APPROVED BY
REGISTERED LANDSCAPE ARCHITECT
JOSEPH M. HOWARDS
4598
Exp. 12/31/12
STATE OF CALIFORNIA

East Bay Regional Park District
East Bay Regional Park District
2950 Peralta Oaks Court
Oakland, CA 94605
P: 888–327–2757

UPPER HESS CREEK
RESTORATION PROJECT
East Contra Costa County, California
– – – – – – –
TEMPORARY FENCE DETAILS

Submittal: BID DOCUMENT
Scale: NTS
Date: 05/23/11
Drawn By: RB,LD,CJ
Checked By: JH,MQ,DS
File No.: 2927–05

1 REMOVE BURIED 50 GALLON METAL BARREL AND RUBBER TIRE

2 REMOVE BURIED 50 GALLON METAL BARREL

3 REMOVE WOOD SPRING BOX PER NOTE #2. WOOD SPRING BOX IS APPROXIMATELY 5 FT DEEP.

4 REMOVE REDWOOD CULVERT BOX AT EXISTING DRAINAGE CROSSING

5 REMOVE PLASTIC BARRELS

6 REMOVE CONCRETE RUBBLE AND METAL WIRE

7 RELOCATE 2 CONCRETE WATER TROUGHS TO LOCATION 7* REMOVE PLYWOOD, PIPES, & OTHER DEBRIS PER NOTE #3

8 REMOVE PVC PIPING AND METAL BARRELS

NOTES:

1. PHOTOS ARE A REPRESENTATION OF DEBRIS. CONTRACTOR SHALL REMOVE ALL DEBRIS WITHIN THE LIMIT OF DEBRIS REMOVAL.
2. CONTRACTOR SHALL VERTICALLY REMOVE 3 CORRUGATED PIPES AND 1 WOOD SPRING BOX , LIMITING DISTURBANCE TO EDGES AND AS OUTLINED IN THE SPECIFICATIONS.
3. SALVAGE THE 2 EXISTING WATER TROUGHS IN CHANNEL AS SHOWN. TROUGHS SHALL BE LOCATED IN FLAT AREAS LOWER IN ELEVATION AND DOWNSTREAM OF THE MAIN STOCK POND AND OUTSIDE OF THE CATTLE EXCLUSION FENCING. PLACE ONE TROUGH ON EACH SIDE OF THE DRAINAGE.
4. THE CONTRACTOR SHALL DESTRUCT THE EIGHT PEIZOMETERS / WATER TESTING WELLS LOCATED WITHIN THE LIMIT OF DEBRIS REMOVAL, AS REQUIRED BY CONTRA COSTA COUNTY ENVIRONMENTAL HEALTH PERMIT.

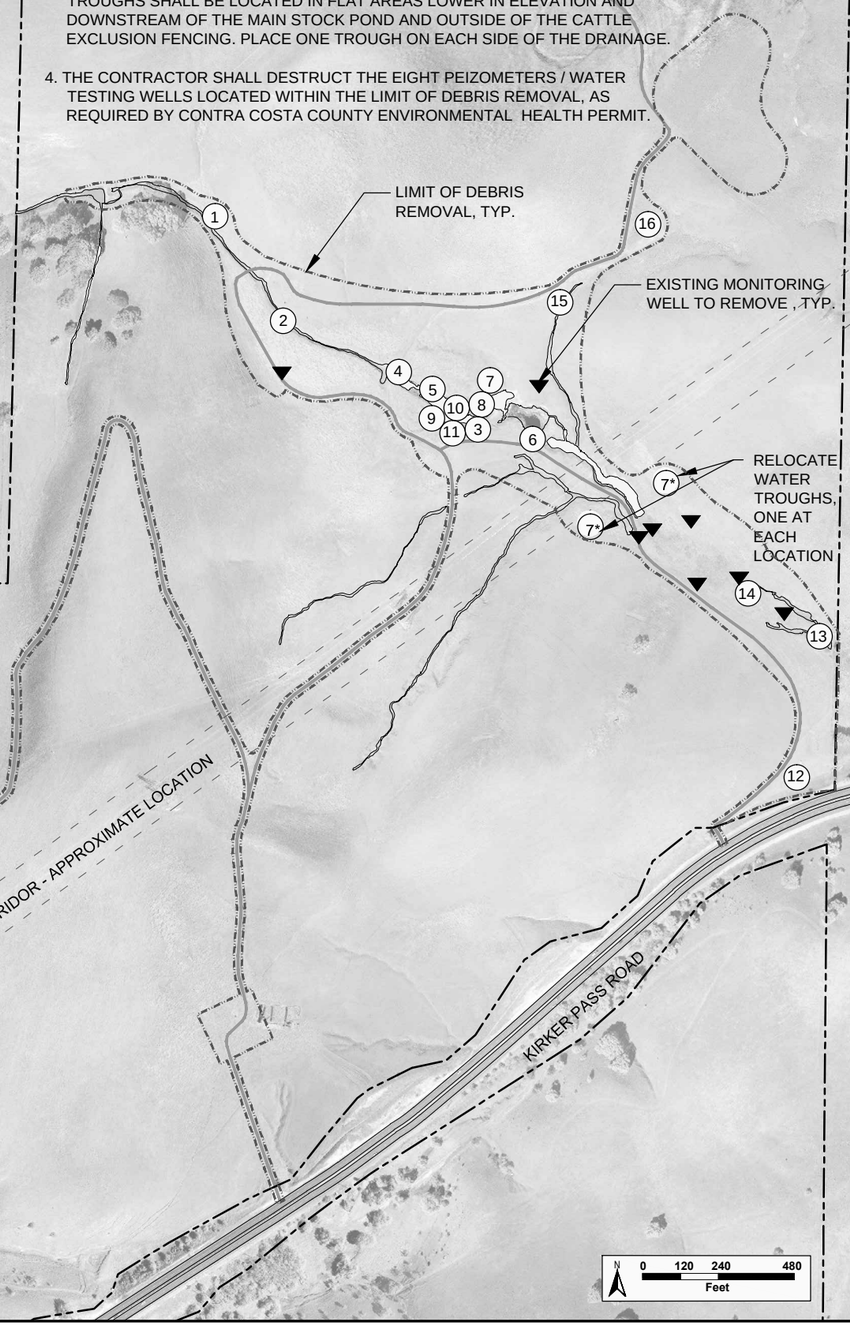

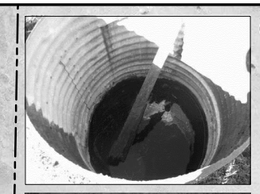

9 REMOVE CORRUGATED PIPES PER NOTE #2. PIPE IS APPROXIMATELY 3 FT DIAMETER, +/- 3 FT BELOW GROUND, AND +/- 4 FT ABOVE GROUND.

10 REMOVE CORRUGATED PIPES PER NOTE #2. PIPE IS APPROXIMATELY 3 FT DIAMETER, +/- 3 FT BELOW GROUND, AND +/- 2.5 FT ABOVE GROUND.

11 REMOVE CORRUGATED PIPES PER NOTE #2. PIPE IS APPROXIMATELY 28 INCHES DIAMETER, +/- 3 FT BELOW GROUND, AND +/- 1 FT ABOVE GROUND.

12 REMOVE MISCELLANEOUS DEBRIS

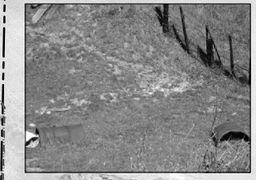

13 REMOVE 2 BURIED 50 GALLON METAL BARRELS

14 REMOVE BURIED RUBBER TIRES

15 REMOVE 50 GALLON METAL BARREL

16 REMOVE MISCELLANEOUS DEBRIS

H. T. HARVEY & ASSOCIATES
ECOLOGICAL CONSULTANTS

REVISIONS	DATE

APPROVED BY
REGISTERED LANDSCAPE ARCHITECT JOSEPH M. EDWARDS 4598 Exp. 12/31/12 STATE OF CALIFORNIA

East Bay Regional Park District
East Bay Regional Park District
2950 Peralta Oaks Court
Oakland, CA 94605
P: 888-327-2757

UPPER HESS CREEK
RESTORATION PROJECT
East Contra Costa County, California

DEBRIS REMOVAL & SALVAGE

Submittal: BID DOCUMENT
Scale: see drawing
Date: 05/23/11
Drawn By: RB,LD,CJ
Checked By: JH,MQ,DS
File No.: 2927-05

SHEET **L4.0**
6 OF 30 SHEETS

NOTES:

PROJECT AREA IS LOCATED WITHIN AN ACTIVE EPHEMERAL CHANNEL AREA. THE 2008 TOPOGRAPHY SHOWN ON PLANS MAY BE DIFFERENT FROM CURRENT CONDITIONS. CONTRACTOR SHALL BECOME FAMILIAR WITH THE EXISTING CONDITIONS AND FIELD FIT AS NECESSARY.

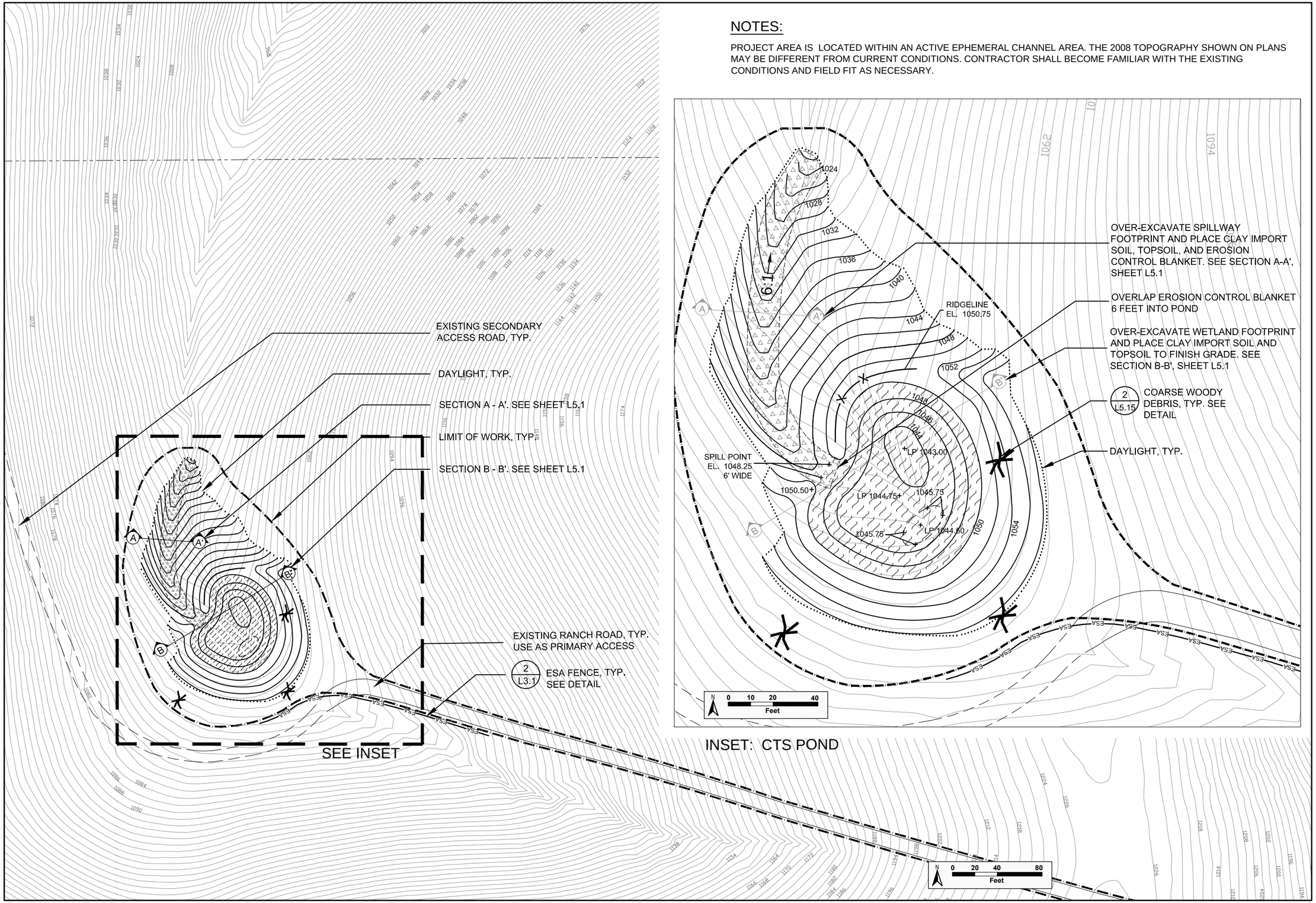

H. T. HARVEY & ASSOCIATES
ECOLOGICAL CONSULTANTS

HYDROLOGIC CONSULTANTS
Balance Hydrologics, Inc.

REVISIONS	DATE

APPROVED BY
REGISTERED LANDSCAPE ARCHITECT JOSEPH M. HOWARD 4598 Exp. 12/31/12 STATE OF CALIFORNIA

East Bay Regional Park District
East Bay Regional Park District
2950 Peralta Oaks Court
Oakland, CA 94605
P: 888-327-2757

UPPER HESS CREEK
RESTORATION PROJECT
East Contra Costa County, California

GRADING PLAN - CTS POND

Submittal: BID DOCUMENT
Scale: see drawing
Date: 05/23/11
Drawn By: RB,LD,CJ
Checked By: JH,MQ,DS
File No.: 2927-05

SHEET **L5.0**
7 OF 30 SHEETS

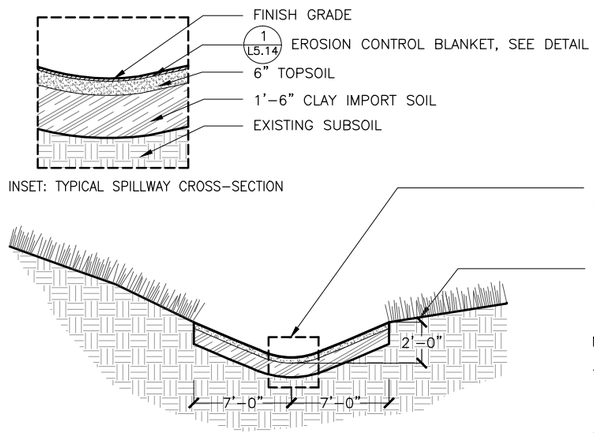

NOTES:

1. OVER EXCAVATE AND BACKFILL AS SHOWN TO MEET FINAL DESIGN GRADES.
2. APPLY SEED PER SHEET L7.0 PRIOR TO INSTALLATION OF EROSION CONTROL FABRIC.

SECTION
NTS

1 SECTION A–A' – CTS POND SPILLWAY, TYPICAL

cts pond–typical spillway_8

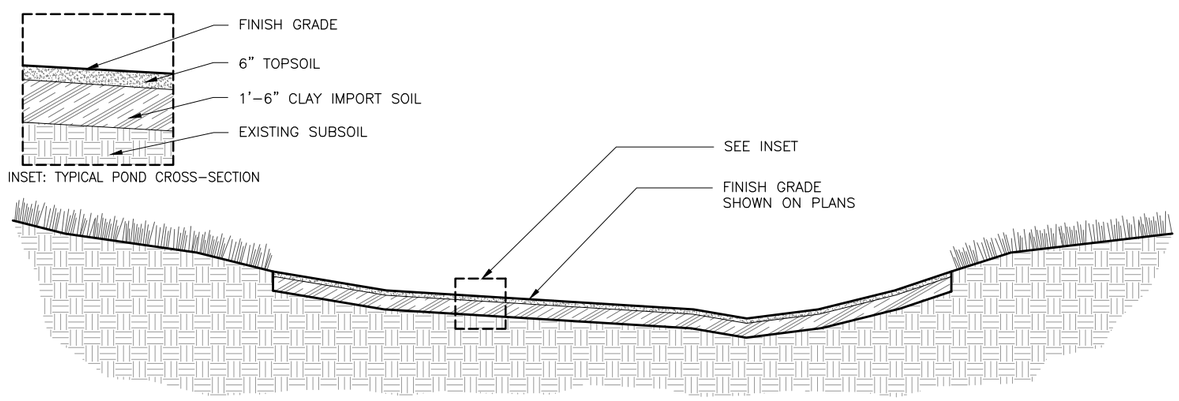

NOTES:

1. OVER EXCAVATE AND BACKFILL AS SHOWN TO MEET FINAL DESIGN GRADES.

SECTION
NTS

2 SECTION B–B' – CTS POND

cts pond–typical section_8

H. T. HARVEY & ASSOCIATES
ECOLOGICAL CONSULTANTS

HYDROLOGIC CONSULTANTS
Balance Hydrologics, Inc.

REVISIONS	DATE

APPROVED BY
REGISTERED LANDSCAPE ARCHITECT
JOSEPH M. HOWARDS
4598
Exp. 12/31/12
STATE OF CALIFORNIA

East Bay Regional Park District

East Bay Regional Park District
2950 Peralta Oaks Court
Oakland, CA 94605
P: 888-327-2757

UPPER HESS CREEK
RESTORATION PROJECT

East Contra Costa County, California

GRADING DETAILS - CTS POND

Submittal: BID DOCUMENT
Scale: see drawing
Date: 05/23/11
Drawn By: RB,LD,CJ
Checked By: JH,MQ,DS
File No.: 2927-05

SHEET **L5.1**
8 OF 30 SHEETS

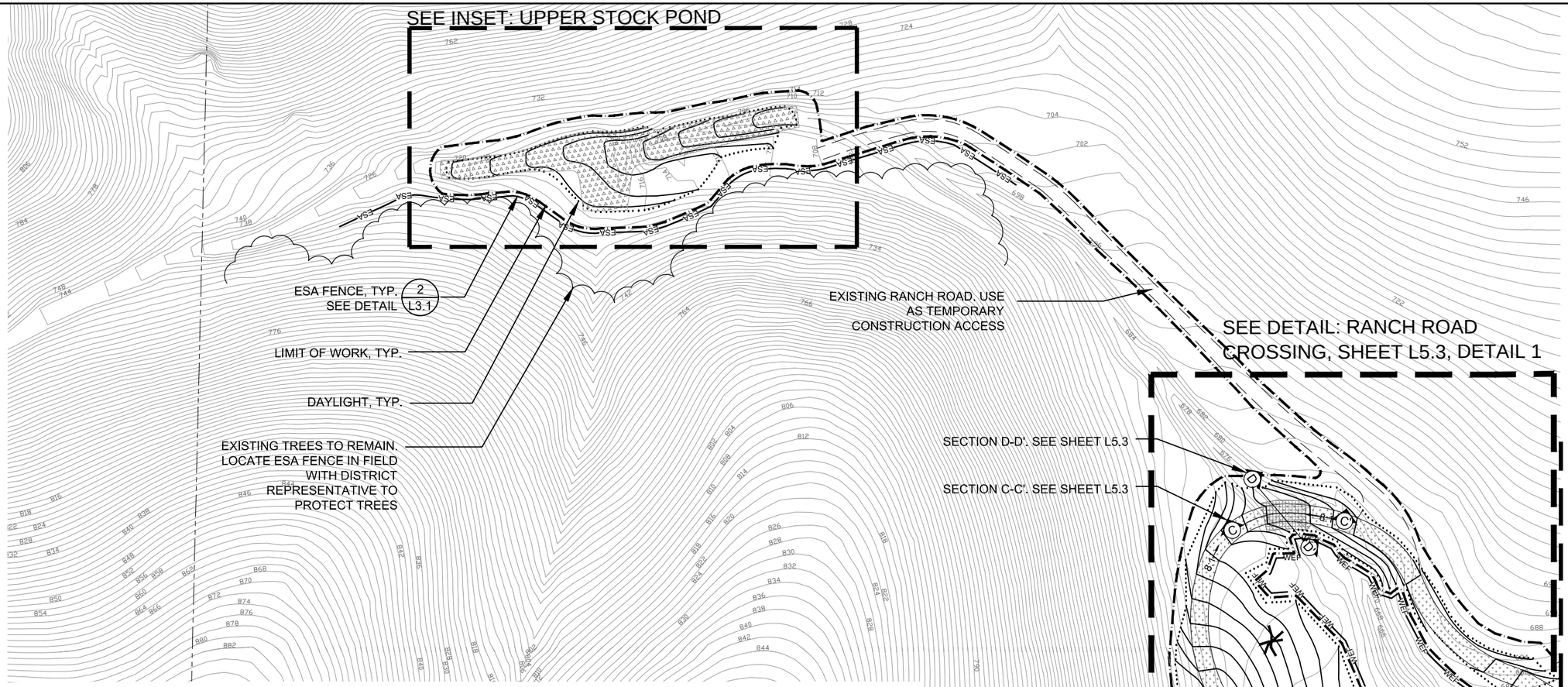

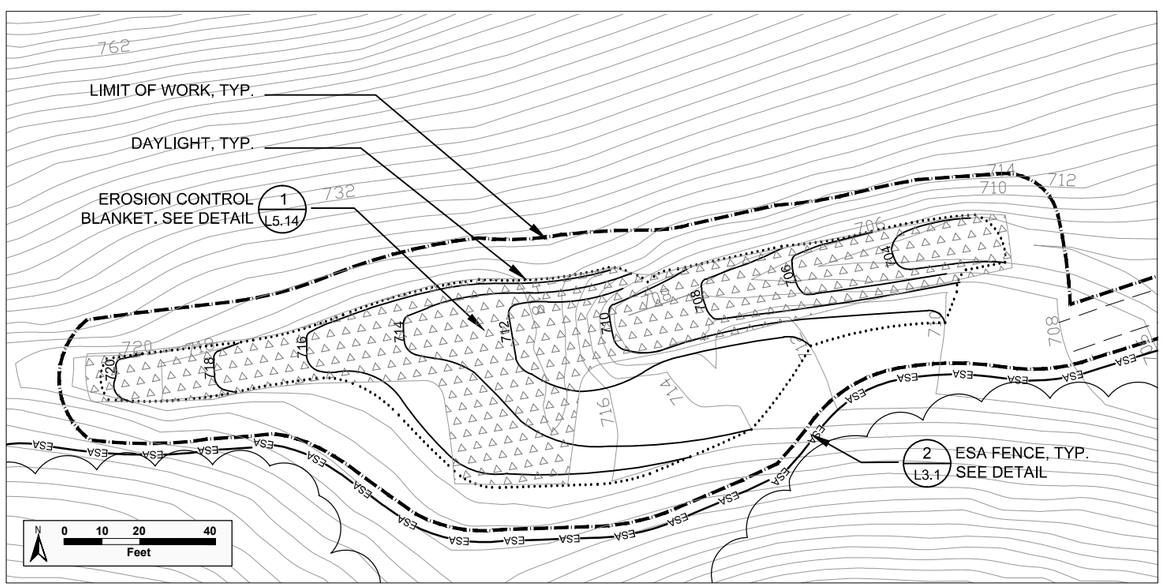

INSET: UPPER STOCK POND

H. T. HARVEY & ASSOCIATES
ECOLOGICAL CONSULTANTS

HYDROLOGIC CONSULTANTS
Balance Hydrologics, Inc.

REVISIONS	DATE

APPROVED BY
REGISTERED LANDSCAPE ARCHITECT JOSEPH M. HOWARD 4598 Exp. 12/31/12 STATE OF CALIFORNIA

East Bay Regional Park District

East Bay Regional Park District
2950 Peralta Oaks Court
Oakland, CA 94605
P: 888-327-2757

UPPER HESS CREEK RESTORATION PROJECT

East Contra Costa County, California

GRADING PLAN - UPPER STOCK POND & RANCH ROAD CROSSING

Submittal: BID DOCUMENT
Scale: see drawing
Date: 03/23/11
Drawn By: RB,LD,CJ
Checked By: JH,MQ,DS
File No.: 2927-05

SHEET **L5.2**
9 OF 30 SHEETS

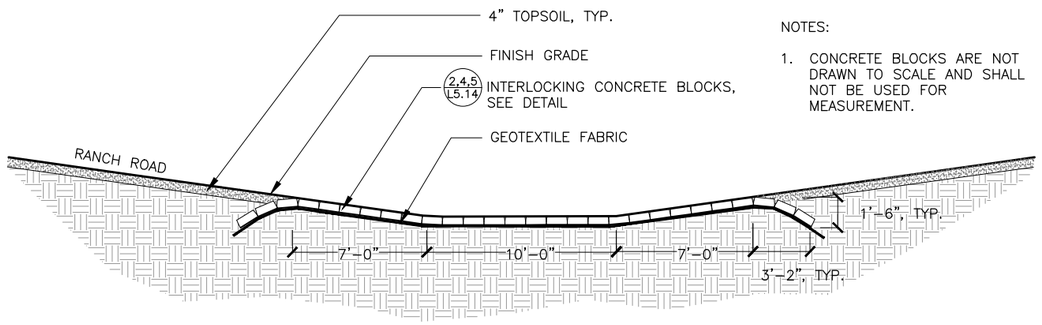

NOTES:

1. CONCRETE BLOCKS ARE NOT DRAWN TO SCALE AND SHALL NOT BE USED FOR MEASUREMENT.

SECTION
NTS

2 SECTION C–C' – RANCH ROAD CROSSING (ALONG RANCH ROAD)

section c–1–ranch road crossing_8

NOTES:

1. CONCRETE BLOCKS ARE NOT DRAWN TO SCALE AND SHALL NOT BE USED FOR MEASUREMENT.

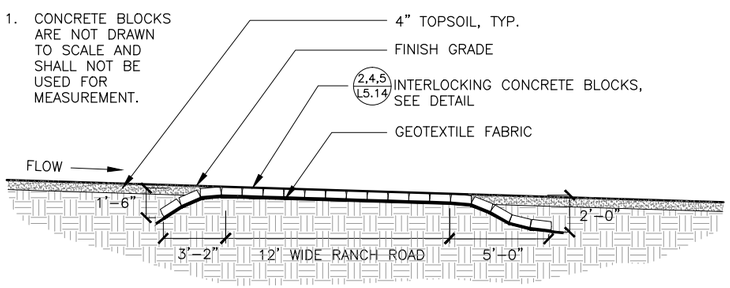

SECTION
NTS

3 SECTION D–D' – RANCH ROAD CROSSING (ALONG CREEK)

section c–2–ranch road crossing_8

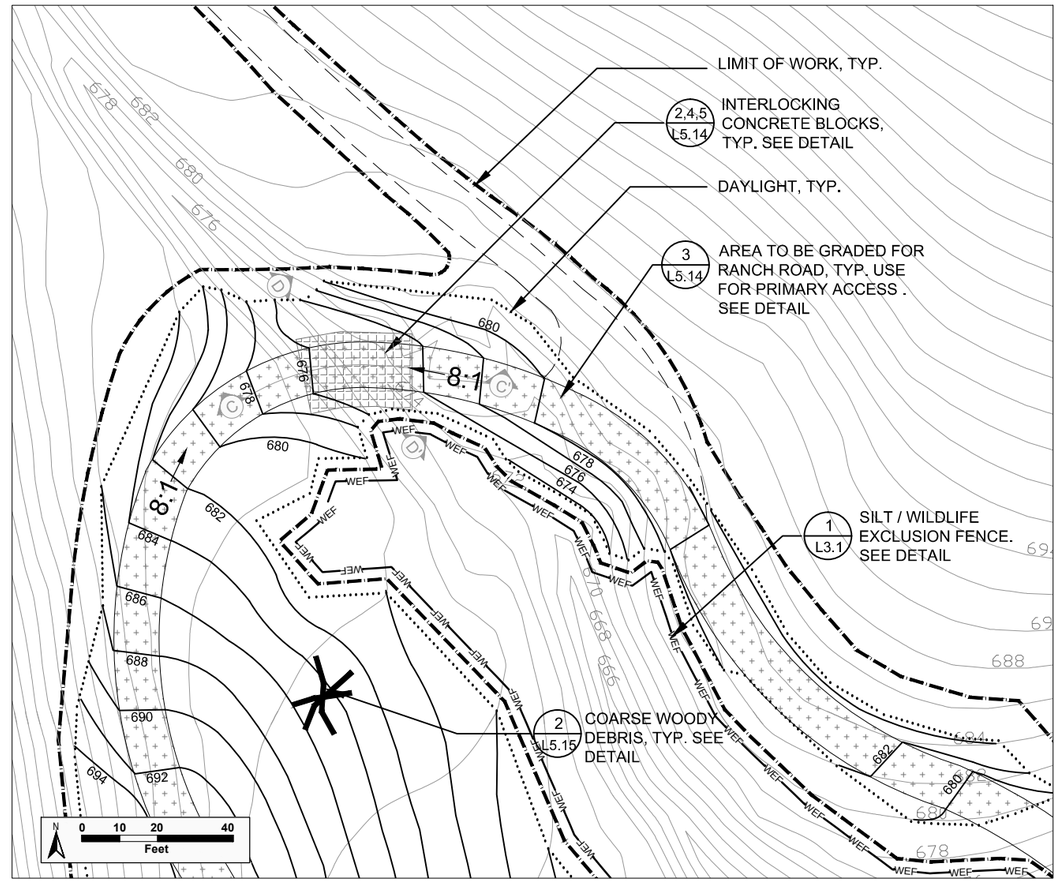

PLAN
1" = 20'

1 RANCH ROAD CROSSING

H. T. HARVEY & ASSOCIATES
ECOLOGICAL CONSULTANTS

HYDROLOGIC CONSULTANTS
Balance Hydrologics, Inc.

REVISIONS	DATE

APPROVED BY
REGISTERED LANDSCAPE ARCHITECT JOSEPH M. HOWARD 4598 Exp. 12/31/12 STATE OF CALIFORNIA

East Bay Regional Park District
East Bay Regional Park District
2950 Peralta Oaks Court
Oakland, CA 94605
P: 888–327–2757

UPPER HESS CREEK
RESTORATION PROJECT
East Contra Costa County, California

GRADING DETAILS - UPPER STOCK POND & RANCH ROAD CROSSING

Submittal: BID DOCUMENT
Scale: see drawing
Date: 05/23/11
Drawn By: RB,LD,CJ
Checked By: JH,MQ,DS
File No.: 2927–05

SHEET **L5.3**
10 OF 30 SHEETS

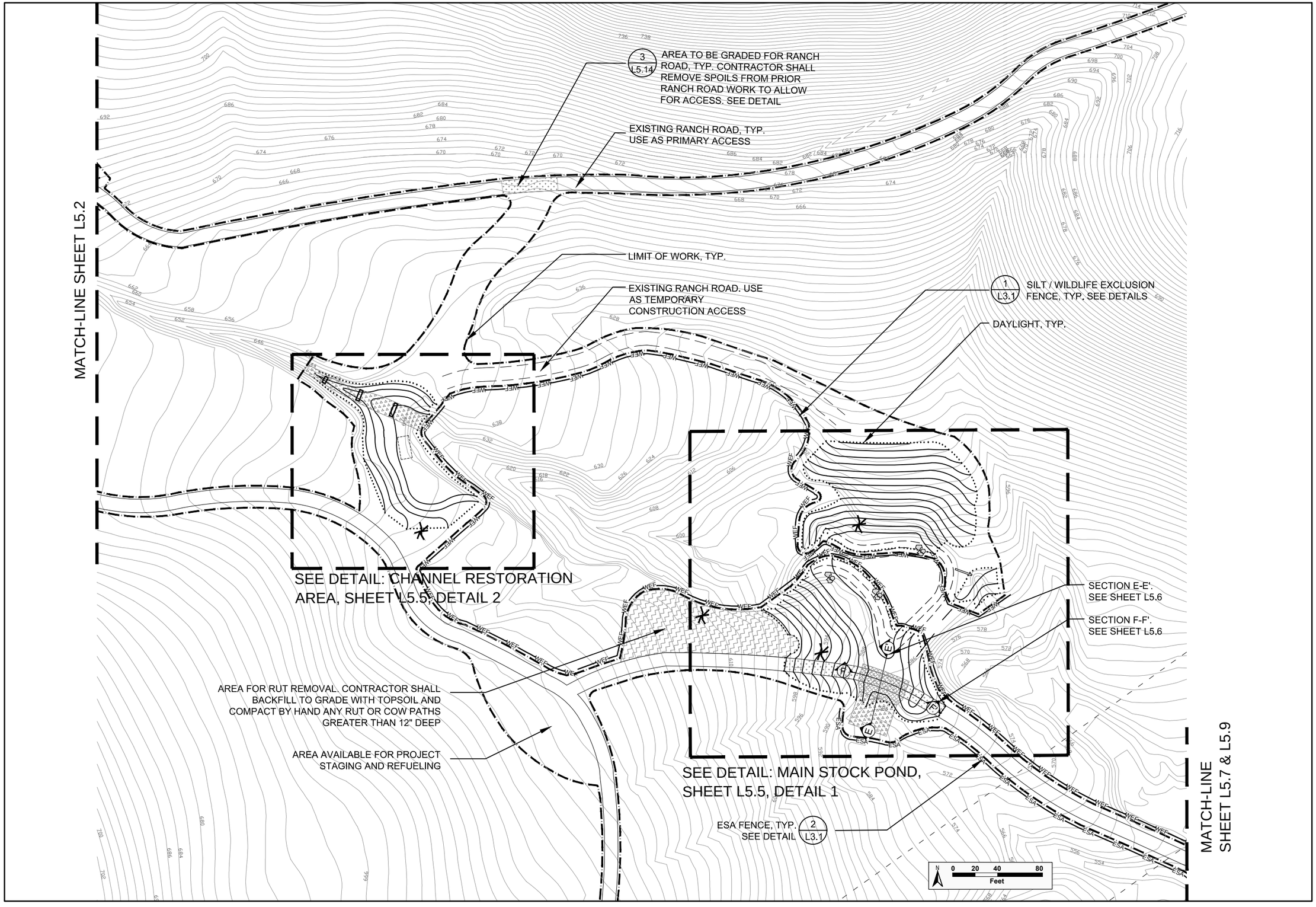

H. T. HARVEY & ASSOCIATES
ECOLOGICAL CONSULTANTS

HYDROLOGIC CONSULTANTS
Balance Hydrologics, Inc.

REVISIONS	DATE

APPROVED BY
REGISTERED LANDSCAPE ARCHITECT JOSEPH M. EDWARDS 4598 Exp. 12/31/12 STATE OF CALIFORNIA

East Bay Regional Park District
East Bay Regional Park District
2950 Peralta Oaks Court
Oakland, CA 94605
P: 888-327-2757

UPPER HESS CREEK
RESTORATION PROJECT
East Contra Costa County, California

GRADING PLAN - CHANNEL RESTORATION & MAIN STOCK POND

Submittal: BID DOCUMENT
Scale: see drawing
Date: 05/23/11
Drawn By: RB,LD,CJ
Checked By: JH,MQ,DS
File No.: 2927-05

SHEET **L5.4**
11 OF 30 SHEETS

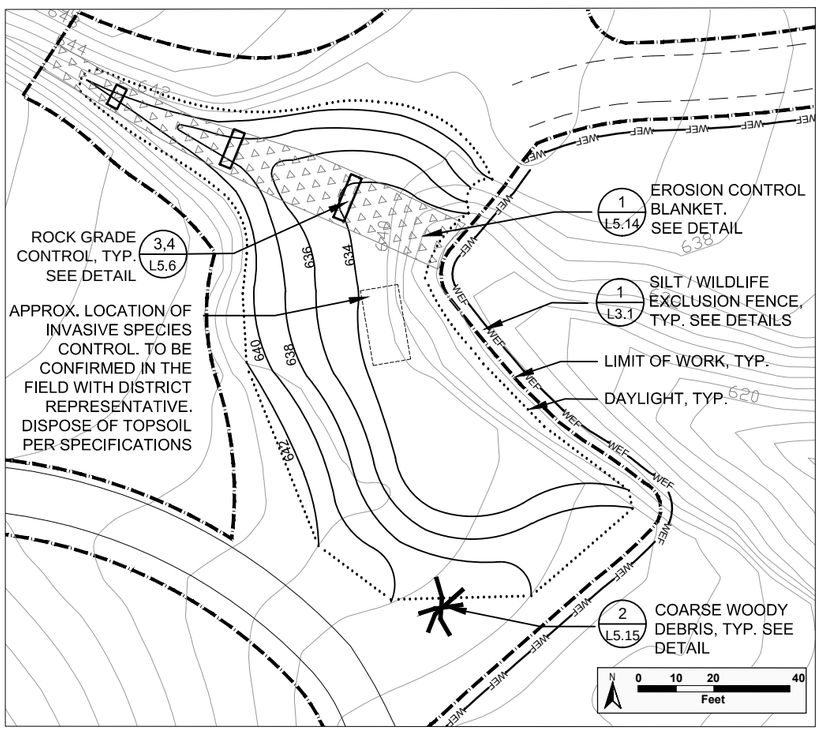

PLAN
1" = 20'

2 CHANNEL RESTORATION AREA

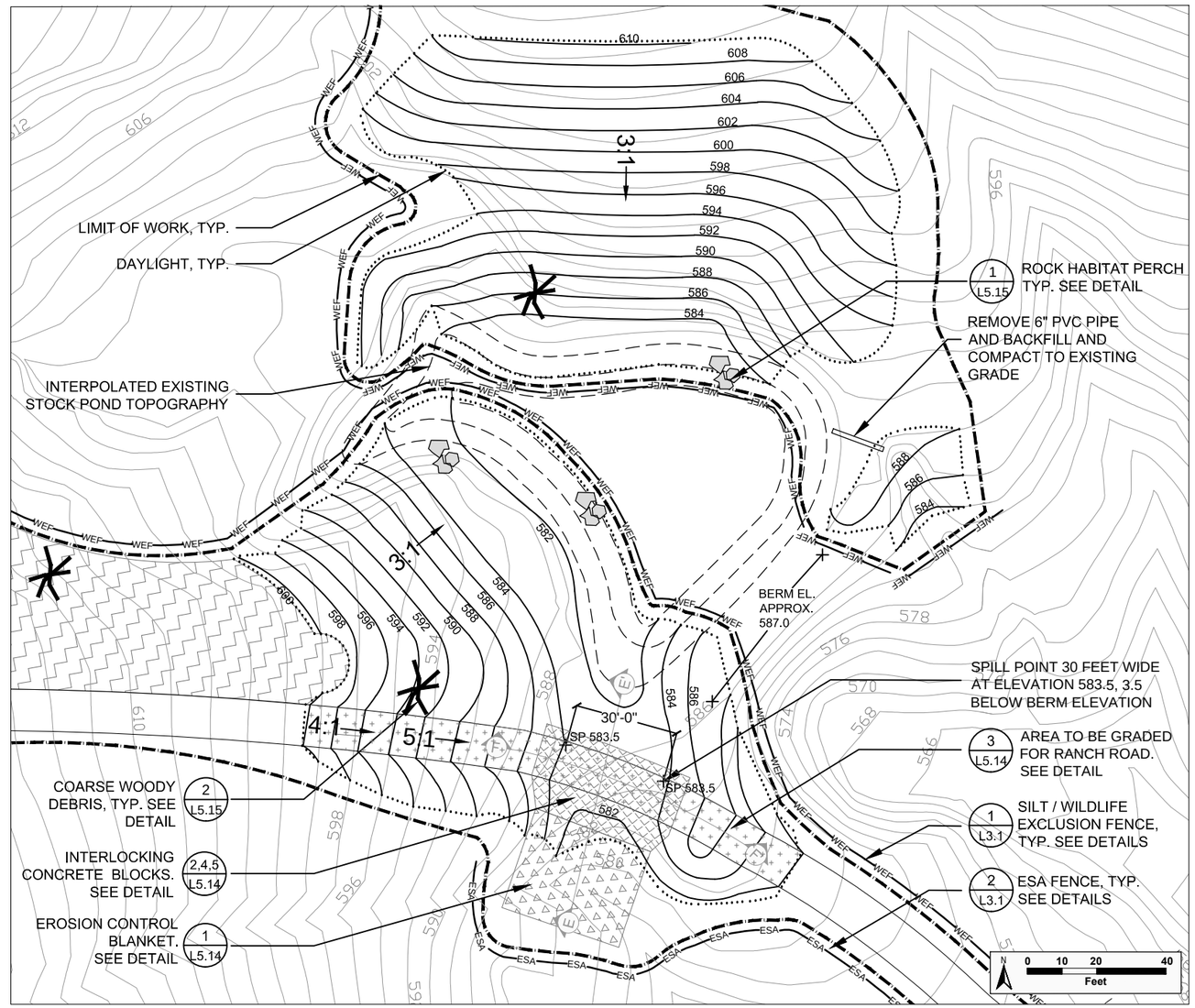

PLAN
1" = 20'

1 MAIN STOCK POND

H. T. HARVEY & ASSOCIATES
ECOLOGICAL CONSULTANTS

HYDROLOGIC CONSULTANTS
Balance Hydrologics, Inc.

REVISIONS	DATE

APPROVED BY
REGISTERED LANDSCAPE ARCHITECT JOSEPH M. EDWARDS 4598 Exp. 12/31/12 STATE OF CALIFORNIA

East Bay Regional Park District
2950 Peralta Oaks Court
Oakland, CA 94605
P: 888-327-2757

UPPER HESS CREEK RESTORATION PROJECT
East Contra Costa County, California

GRADING DETAILS - CHANNEL RESTORATION & MAIN STOCK POND

Submittal: BID DOCUMENT
Scale: see drawing
Date: 05/23/11
Drawn By: RB,LD,CJ
Checked By: JH,MQ,DS
File No.: 2927-05

SHEET **L5.5**
12 OF 30 SHEETS

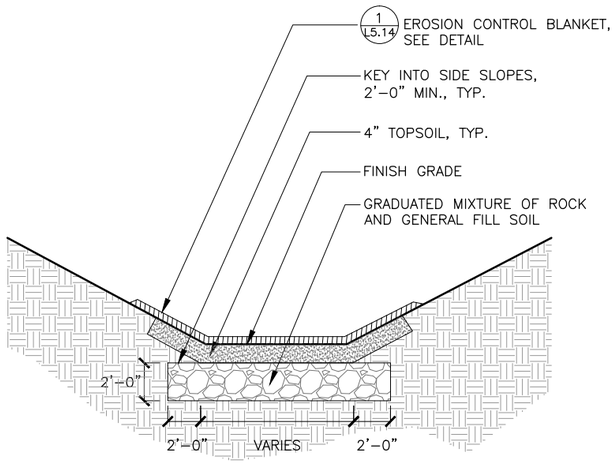

SECTION
NTS

3 ROCK GRADE CONTROL CROSS-SECTION

rockgradecontrol_XS.dwg

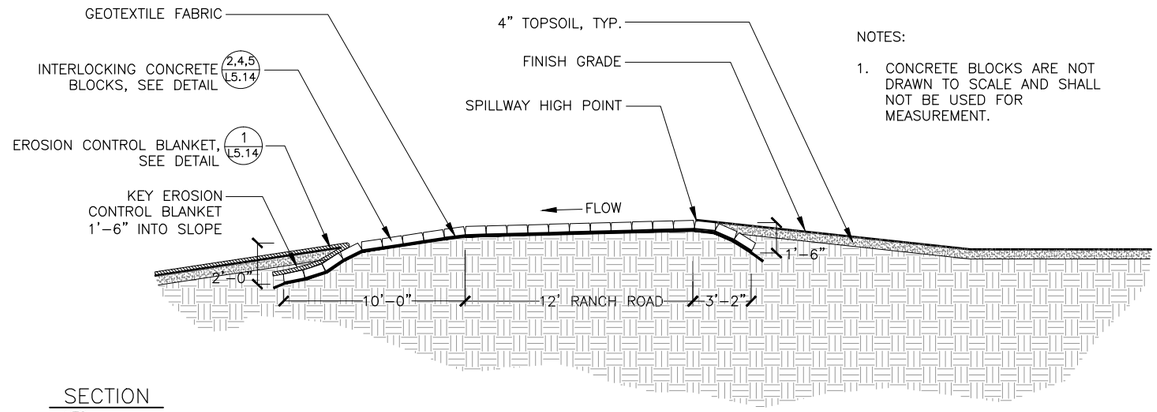

NOTES:

1. CONCRETE BLOCKS ARE NOT DRAWN TO SCALE AND SHALL NOT BE USED FOR MEASUREMENT.

SECTION
NTS

1 SECTION E-E' – MAIN STOCK POND SPILLWAY (THROUGH RANCH ROAD)

section c-spillway_4

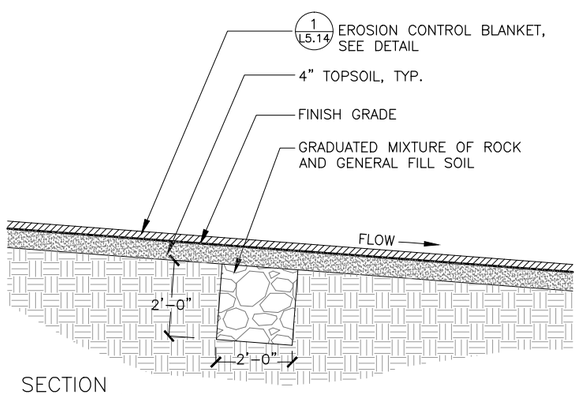

SECTION
NTS

4 ROCK GRADE CONTROL

rockgradecontrol.dwg

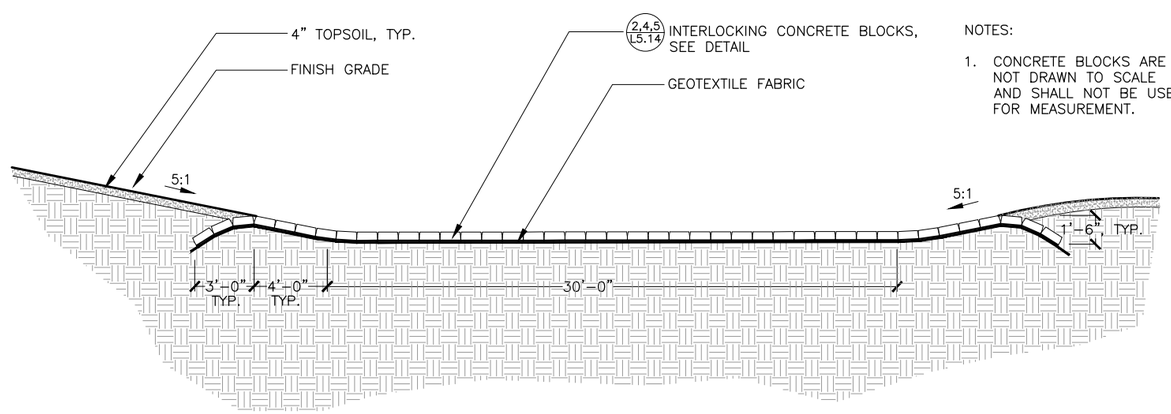

NOTES:

1. CONCRETE BLOCKS ARE NOT DRAWN TO SCALE AND SHALL NOT BE USED FOR MEASUREMENT.

SECTION
NTS

2 SECTION F-F' – MAIN STOCK POND SPILLWAY (ALONG RANCH ROAD)

section e-spillway_4

H. T. HARVEY & ASSOCIATES
ECOLOGICAL CONSULTANTS

HYDROLOGIC CONSULTANTS
Balance Hydrologics, Inc.

REVISIONS	DATE

APPROVED BY
REGISTERED LANDSCAPE ARCHITECT JOSEPH M. EDWARDS 4598 Exp. 12/31/12 STATE OF CALIFORNIA

East Bay Regional Park District
East Bay Regional Park District
2950 Peralta Oaks Court
Oakland, CA 94605
P: 888-327-2757

UPPER HESS CREEK
RESTORATION PROJECT

East Contra Costa County, California

GRADING DETAILS - CHANNEL RESTORATION & MAIN STOCK POND

Submittal: BID DOCUMENT
Scale: see drawing
Date: 05/23/11
Drawn By: RB,LD,CJ
Checked By: JH,MQ,DS
File No.: 2927-05

SHEET **L5.6**
13 OF 30 SHEETS

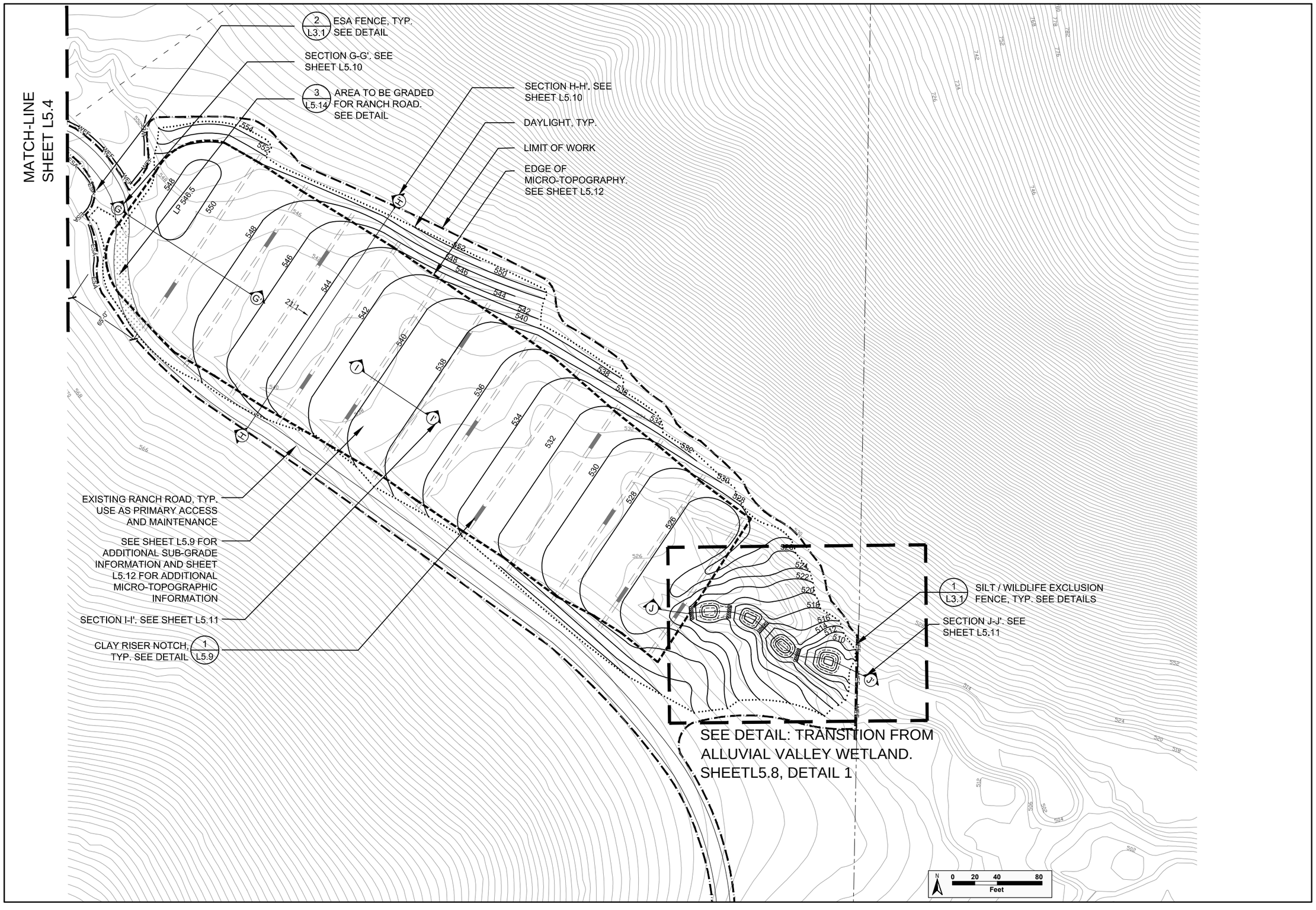

H. T. HARVEY & ASSOCIATES
ECOLOGICAL CONSULTANTS

HYDROLOGIC CONSULTANTS
Balance Hydrologics, Inc.

REVISIONS	DATE

APPROVED BY
REGISTERED LANDSCAPE ARCHITECT
JOSEPH M. HOWARD
4598
Exp. 12/31/12
STATE OF CALIFORNIA

East Bay Regional Park District
East Bay Regional Park District
2950 Peralta Oaks Court
Oakland, CA 94605
P: 888-327-2757

UPPER HESS CREEK
RESTORATION PROJECT
East Contra Costa County, California
- - - - - - -
GRADING PLAN - ALLUVIAL VALLEY

Submittal: BID DOCUMENT
Scale: see drawing
Date: 05/23/11
Drawn By: RB,LD,CJ
Checked By: JH,MQ,DS
File No.: 2927-05

SHEET **L5.7**
14 OF 30 SHEETS

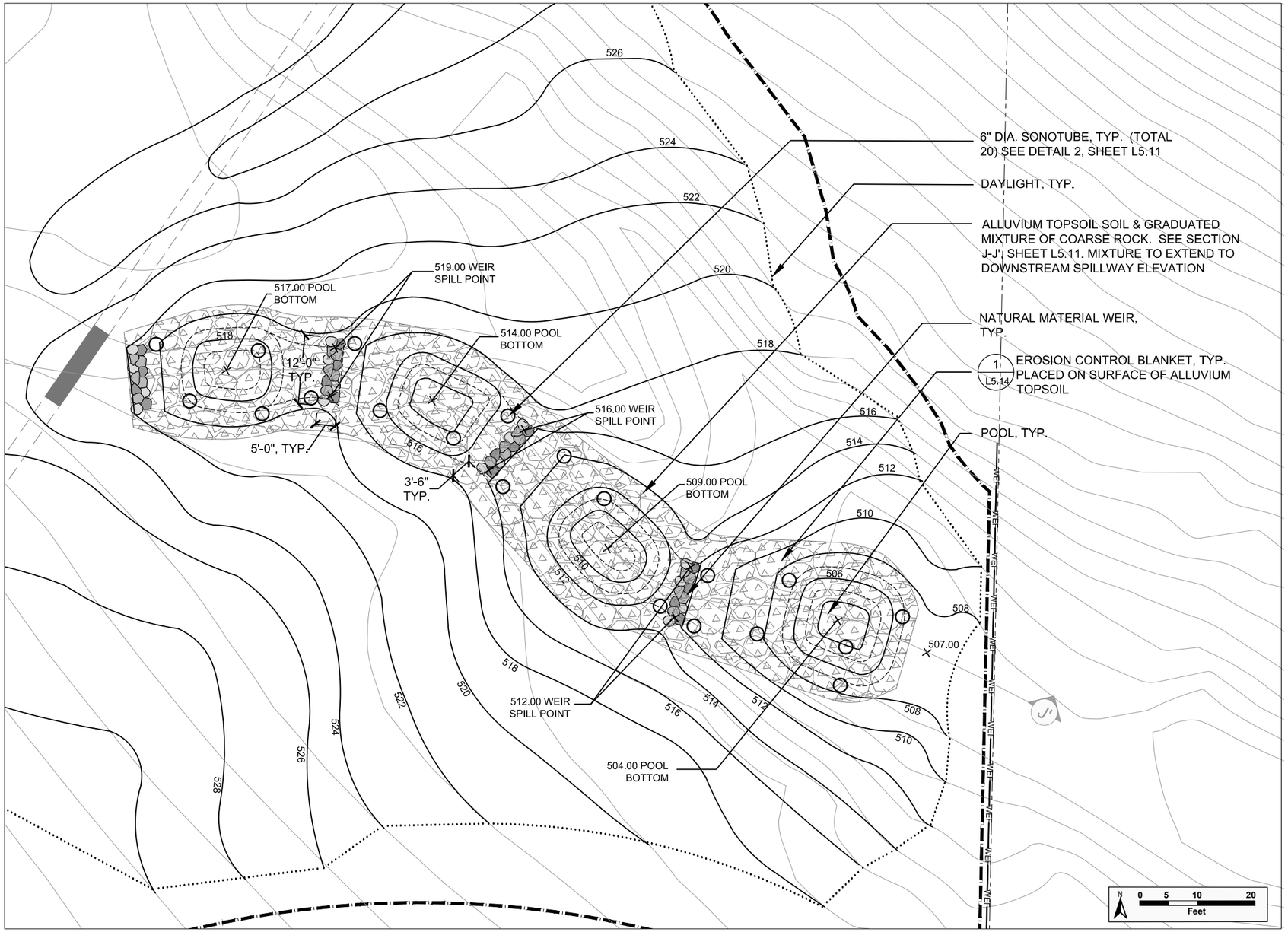

PLAN
1" = 10'

1 TRANSITION FROM ALLUVIAL VALLEY WETLAND

H. T. HARVEY & ASSOCIATES
ECOLOGICAL CONSULTANTS

HYDROLOGIC CONSULTANTS
Balance Hydrologics, Inc.

REVISIONS	DATE

APPROVED BY
REGISTERED LANDSCAPE ARCHITECT
JOSEPH M. HOWARD
4598
Exp. 12/31/12
STATE OF CALIFORNIA

East Bay Regional Park District

East Bay Regional Park District
2950 Peralta Oaks Court
Oakland, CA 94605
P: 888-327-2757

UPPER HESS CREEK
RESTORATION PROJECT

East Contra Costa County, California

GRADING DETAILS (1) - ALUVIAL VALLEY

Submittal: BID DOCUMENT
Scale: see drawing
Date: 05/23/11
Drawn By: RB,LD,CJ
Checked By: JH,MQ,DS
File No.: 2927-05

SHEET **L5.8**
15 OF 30 SHEETS

MATCH-LINE
SHEET L5.4

2 / L3.1 ESA FENCE, TYP. SEE DETAIL

LOCATE CENTERLINE AT CENTER OF ROAD AT WETLAND EDGE. APPROX, LATITUDE: 37°58'37.32"N LONGITUDE: 121°55'1.63"W

SECTION G-G', SHEET L5.10

SECTION H-H', SHEET L5.10

SECTION I-I', SHEET L5.11

LIMIT OF WORK

1 / - CLAY RISER NOTCH, TYP. SEE DETAIL

DAYLIGHT, TYP.

CONTRACTOR SHALL STAKE AND NUMBER THE LOCATIONS OF CLAY RISERS IN FIELD. STAKES SHALL BE PLACED ON BOTH THE NORTH AND SOUTH SIDES OF THE ALLUVIAL VALLEY.

2 / L5.10 CLAY LAYER TRANSITION INTO VALLEY EDGE, TYP. TO EXTEND 6" ABOVE ALLUVIUM TOPSOIL LAYER AT VALLEY EDGE. SEE DETAIL

CLAY LAYER

ALLUVIAL VALLEY LAYOUT CONTROL LINE

EXISTING RANCH ROAD, TYP. USE AS PRIMARY ACCESS AND MAINTENANCE

1 / L3.1 SILT / WILDLIFE EXCLUSION FENCE, TYP. SEE DETAILS

LOCATE CENTERLINE AT LOW-POINT IN CHANNEL AT FENCE. APPROX. LATITUDE: 37°58'33.44"N LONGITUDE: 121°54'53.60"W

SECTION J-J', SEE SHEET L5.11

35'-0" 35'-0" 47'-0" 37'-6" 38'-0" 55'-0" 48'-6" TYP. 7'-6" 52'-6" 42'-0" 7'-6" 52'-6" 28'-6"

N 0 20 40 80 Feet

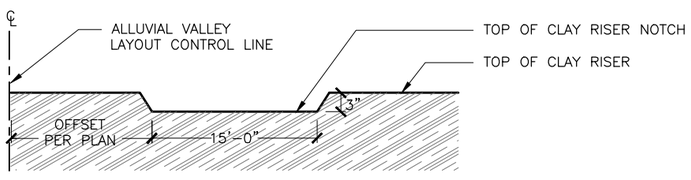

ELEVATION
NTS

1 TYPICAL CLAY RISER NOTCH

typical clay riser notch_24

H. T. HARVEY & ASSOCIATES
ECOLOGICAL CONSULTANTS

HYDROLOGIC CONSULTANTS
Balance Hydrologics, Inc.

REVISIONS	DATE

APPROVED BY
REGISTERED LANDSCAPE ARCHITECT JOSEPH M. HOWARD 4598 Exp. 12/31/12 STATE OF CALIFORNIA

East Bay Regional Park District

East Bay Regional Park District
2950 Peralta Oaks Court
Oakland, CA 94605
P: 888-327-2757

UPPER HESS CREEK RESTORATION PROJECT

East Contra Costa County, California

GRADING PLAN - ALLUVIAL VALLEY (SUB-GRADE LAYOUT)

Submittal: BID DOCUMENT
Scale: see drawing
Date: 03/23/11
Drawn By: RB,LD,CJ
Checked By: JH,MQ,DS
File No.: 2927-05

SHEET **L5.9**
16 OF 30 SHEETS

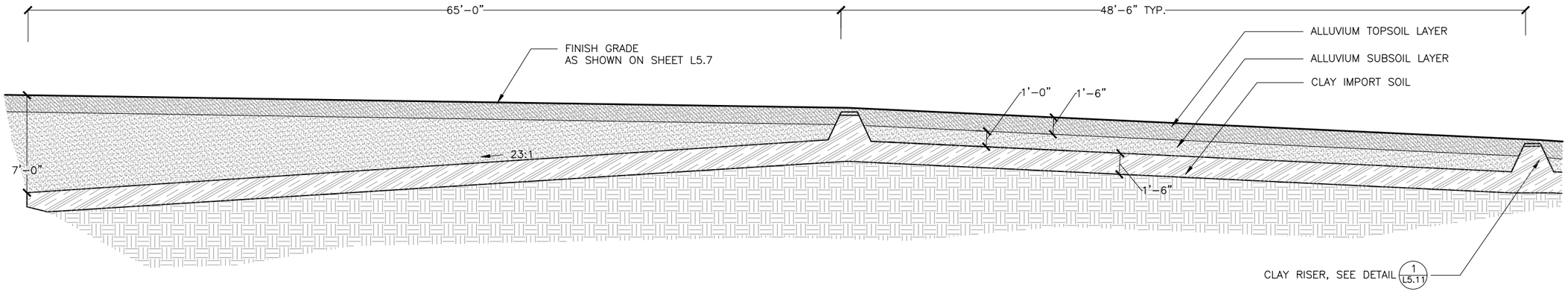

SECTION
NTS

1 SECTION G–G' – TRANSITION TO ALLUVIAL VALLEY WETLAND

section d–wetland transition_8

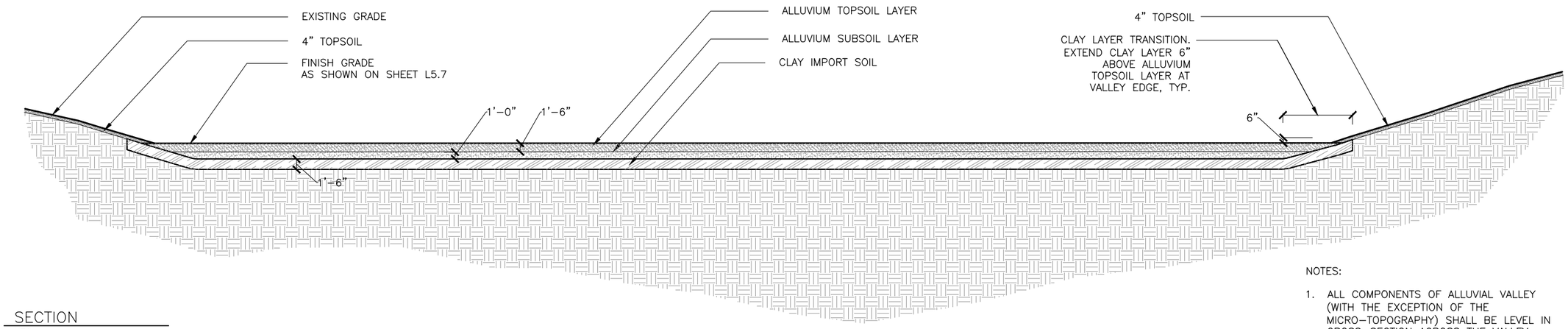

NOTES:

1. ALL COMPONENTS OF ALLUVIAL VALLEY (WITH THE EXCEPTION OF THE MICRO–TOPOGRAPHY) SHALL BE LEVEL IN CROSS–SECTION ACROSS THE VALLEY (SOUTHWEST TO NORTHEAST DIRECTION).

SECTION
NTS

2 SECTION H–H' – ALLUVIAL VALLEY WETLAND

section f–pond width_8

H. T. HARVEY & ASSOCIATES
ECOLOGICAL CONSULTANTS

HYDROLOGIC CONSULTANTS
Balance Hydrologics, Inc.

REVISIONS	DATE

APPROVED BY
REGISTERED LANDSCAPE ARCHITECT
JOSEPH M. HOWARD
4598
Exp. 12/31/12
STATE OF CALIFORNIA

East Bay Regional Park District
East Bay Regional Park District
2950 Peralta Oaks Court
Oakland, CA 94605
P: 888–327–2757

UPPER HESS CREEK
RESTORATION PROJECT
East Contra Costa County, California
– – – – – – –
GRADING DETAILS (2) - ALLUVIAL VALLEY

Submittal: BID DOCUMENT
Scale: see drawing
Date: 05/23/11
Drawn By: RB,LD,CJ
Checked By: JH,MQ,DS
File No.: 2927–05

SHEET **L5.10**
17 OF 30 SHEETS

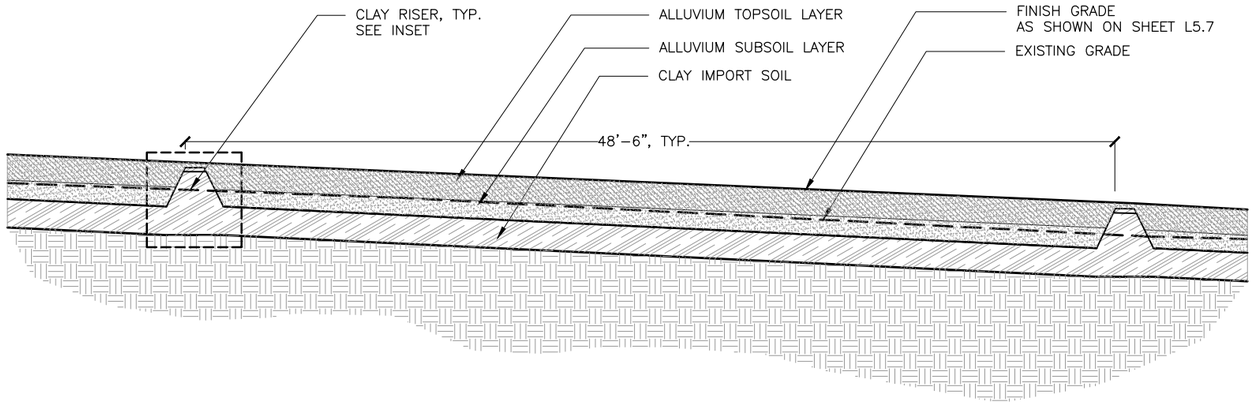

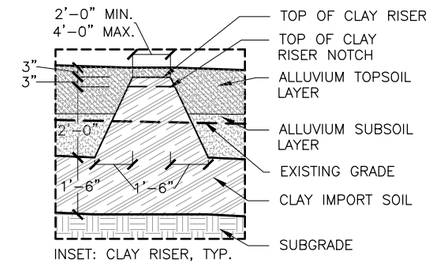

NOTES:

1. OVER-EXCAVATE TO ACCOMMODATE DETAIL
2. SEE SPECIFICATIONS FOR DESCRIPTION OF FILL MATERIAL

SECTION
NTS

1 SECTION I-I' – TYPICAL ALLUVIAL VALLEY CLAY RISER

section g-clay risers_8

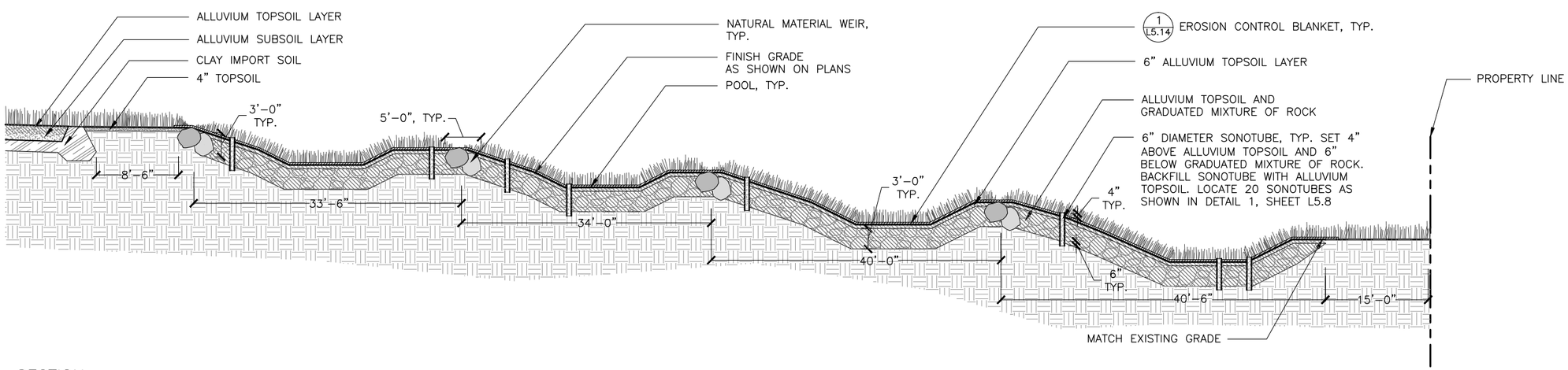

SECTION
NTS

2 SECTION J-J' – TRANSITION FROM ALLUVIAL VALLEY WETLAND

section j-transitionfromvalley_8

H. T. HARVEY & ASSOCIATES
ECOLOGICAL CONSULTANTS

HYDROLOGIC CONSULTANTS
Balance Hydrologics, Inc.

REVISIONS	DATE

APPROVED BY
REGISTERED LANDSCAPE ARCHITECT
JOSEPH M. HOWARD
4598
Exp. 12/31/12
STATE OF CALIFORNIA

East Bay Regional Park District
East Bay Regional Park District
2950 Peralta Oaks Court
Oakland, CA 94605
P: 888-327-2757

UPPER HESS CREEK
RESTORATION PROJECT
East Contra Costa County, California

GRADING DETAILS (3) - ALLUVIAL VALLEY

Submittal: BID DOCUMENT
Scale: see drawing
Date: 03/23/11
Drawn By: RB,LD,CJ
Checked By: JH,MQ,DS
File No.: 2927-05

SHEET **L5.11**
18 OF 30 SHEETS

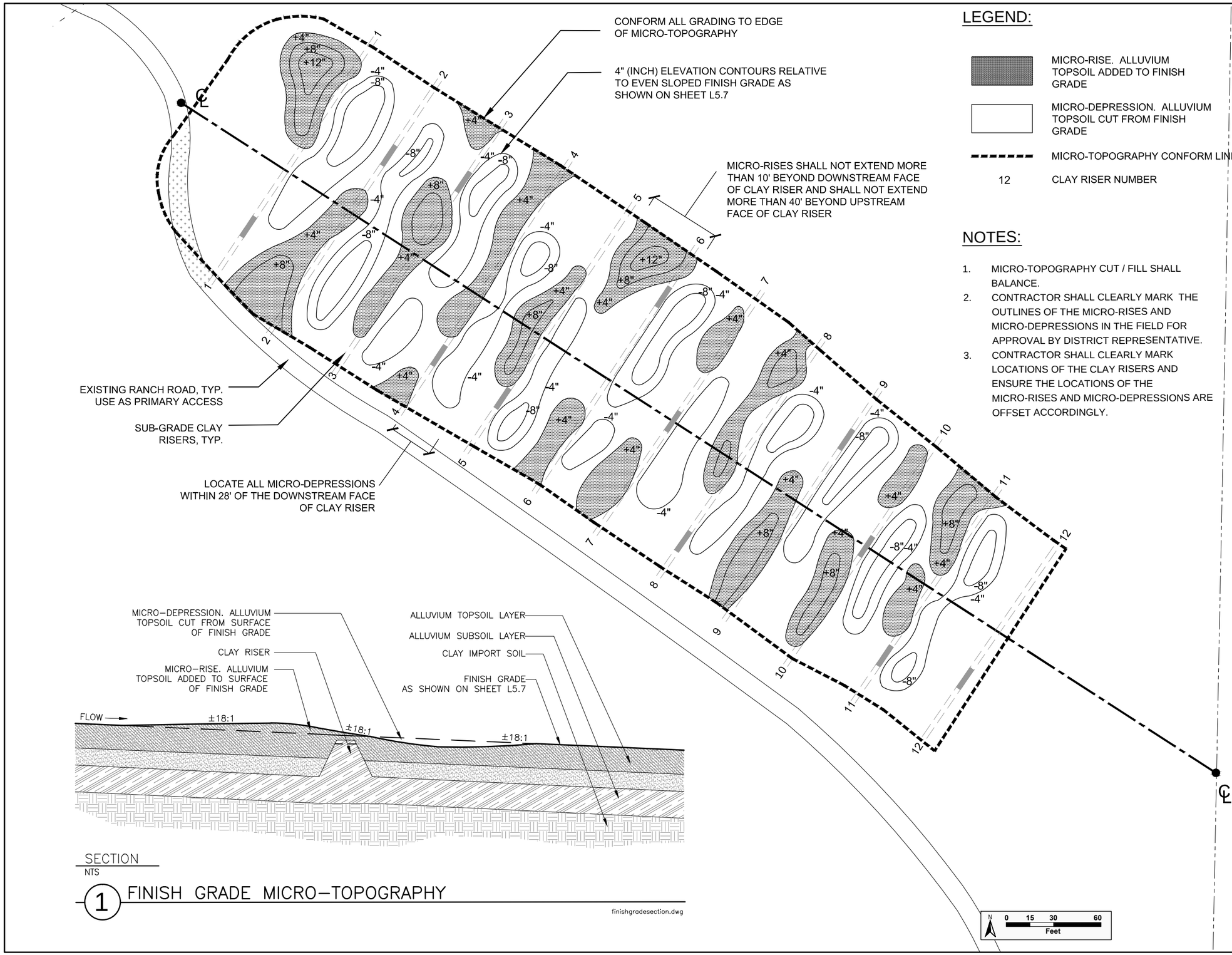

1 FINISH GRADE MICRO–TOPOGRAPHY

LEGEND:

	MICRO-RISE. ALLUVIUM TOPSOIL ADDED TO FINISH GRADE
	MICRO-DEPRESSION. ALLUVIUM TOPSOIL CUT FROM FINISH GRADE
- - - - -	MICRO-TOPOGRAPHY CONFORM LINE
12	CLAY RISER NUMBER

NOTES:

1. MICRO-TOPOGRAPHY CUT / FILL SHALL BALANCE.
2. CONTRACTOR SHALL CLEARLY MARK THE OUTLINES OF THE MICRO-RISES AND MICRO-DEPRESSIONS IN THE FIELD FOR APPROVAL BY DISTRICT REPRESENTATIVE.
3. CONTRACTOR SHALL CLEARLY MARK LOCATIONS OF THE CLAY RISERS AND ENSURE THE LOCATIONS OF THE MICRO-RISES AND MICRO-DEPRESSIONS ARE OFFSET ACCORDINGLY.

H. T. HARVEY & ASSOCIATES ECOLOGICAL CONSULTANTS

HYDROLOGIC CONSULTANTS Balance Hydrologics, Inc.

REVISIONS	DATE

APPROVED BY

REGISTERED LANDSCAPE ARCHITECT JOSEPH M. HOWARD 4598 Exp. 12/31/12 STATE OF CALIFORNIA

East Bay Regional Park District

East Bay Regional Park District
2950 Peralta Oaks Court
Oakland, CA 94605
P: 888–327–2757

UPPER HESS CREEK RESTORATION PROJECT

East Contra Costa County, California

GRADING PLAN - ALLUVIAL VALLEY (MICRO-TOPOGRAPHY)

Submittal: BID DOCUMENT
Scale: see drawing
Date: 05/23/11
Drawn By: RB,LD,CJ
Checked By: JH,MQ,DS
File No.: 2927–05

SHEET **L5.12**

19 OF 30 SHEETS

NOTES:

SEE SPECIFICATION DOCUMENT FOR FINISH GRADE INFORMATION.

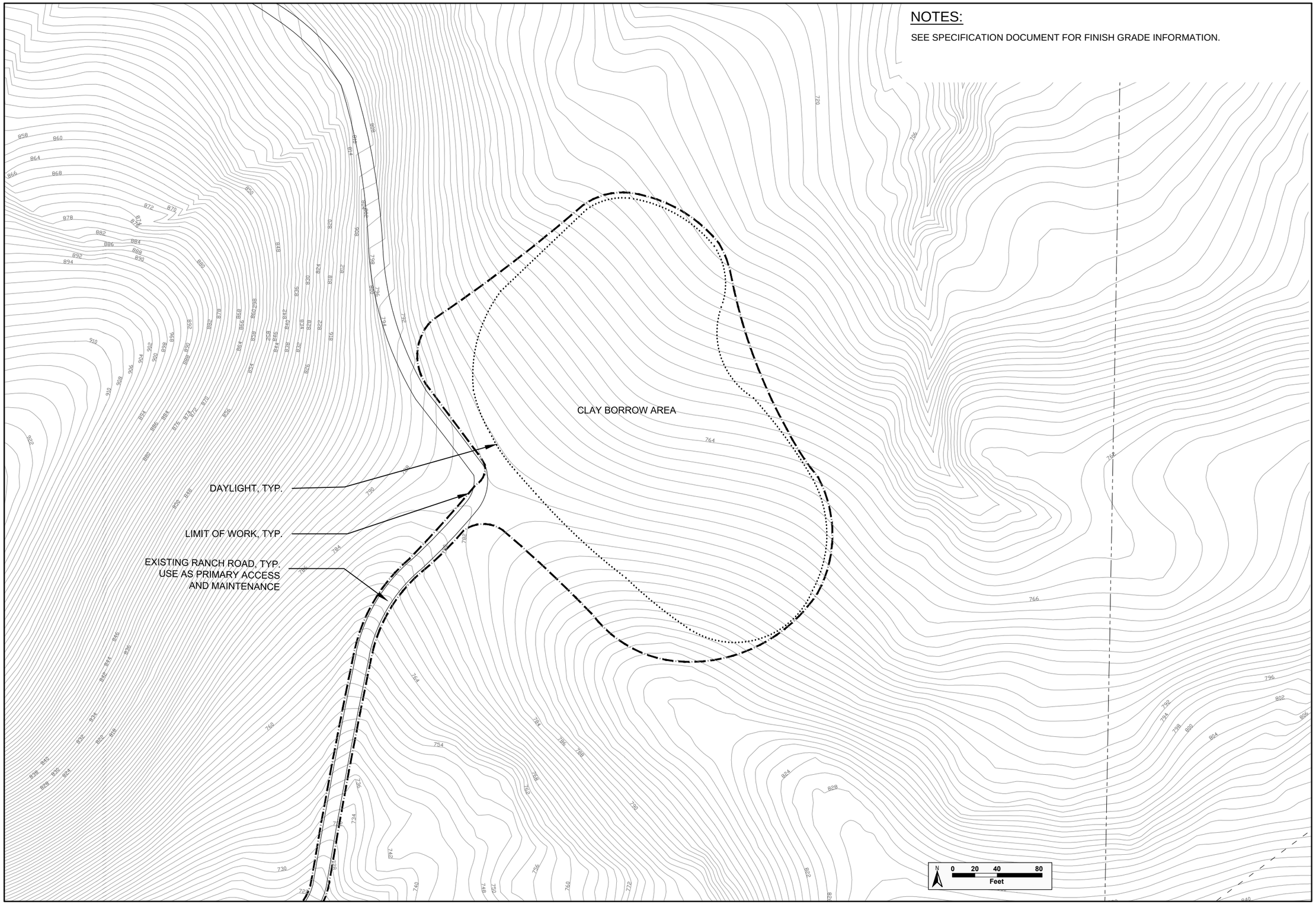

H. T. HARVEY & ASSOCIATES
ECOLOGICAL CONSULTANTS

HYDROLOGIC CONSULTANTS
Balance Hydrologics, Inc.

REVISIONS	DATE

APPROVED BY
REGISTERED LANDSCAPE ARCHITECT
JOSEPH M. HOWARD
4598
Exp. 12/31/12
STATE OF CALIFORNIA

East Bay Regional Park District

East Bay Regional Park District
2950 Peralta Oaks Court
Oakland, CA 94605
P: 888-327-2757

UPPER HESS CREEK
RESTORATION PROJECT

East Contra Costa County, California

GRADING PLAN - CLAY BORROW AREA

Submittal: BID DOCUMENT
Scale: see drawing
Date: 05/23/11
Drawn By: RB,LD,CJ
Checked By: JH,MQ,DS
File No.: 2927-05

SHEET **L5.13**
20 OF 30 SHEETS

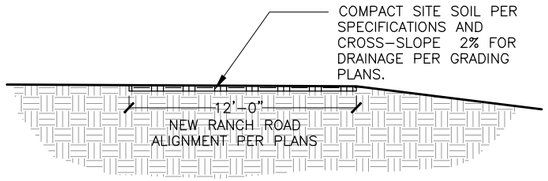

SECTION
NTS

3 RANCH ROAD

ranch road_8

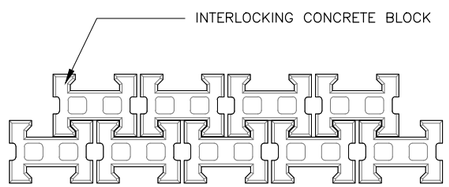

NOTES:

1. ADAPTED FROM ARMORLOC DETAIL, INSTALL PER MANUFACTURES RECOMMENDATION.

PLAN
NTS

4 LAYOUT OF INTERLOCKING CONCRETE BLOCKS

ConcreteBlocksPLAN_8

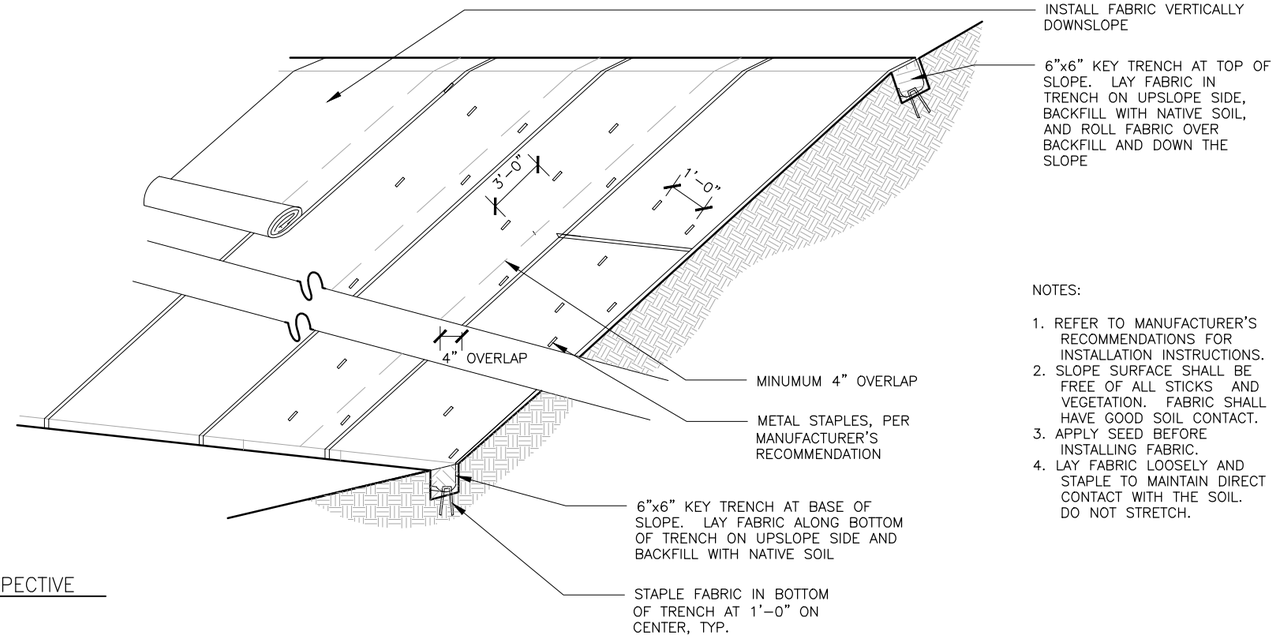

NOTES:

1. REFER TO MANUFACTURER'S RECOMMENDATIONS FOR INSTALLATION INSTRUCTIONS.
2. SLOPE SURFACE SHALL BE FREE OF ALL STICKS AND VEGETATION. FABRIC SHALL HAVE GOOD SOIL CONTACT.
3. APPLY SEED BEFORE INSTALLING FABRIC.
4. LAY FABRIC LOOSELY AND STAPLE TO MAINTAIN DIRECT CONTACT WITH THE SOIL. DO NOT STRETCH.

PERSPECTIVE
NTS

1 EROSION CONTROL BLANKET

erosion control fabric-slope shallow_24

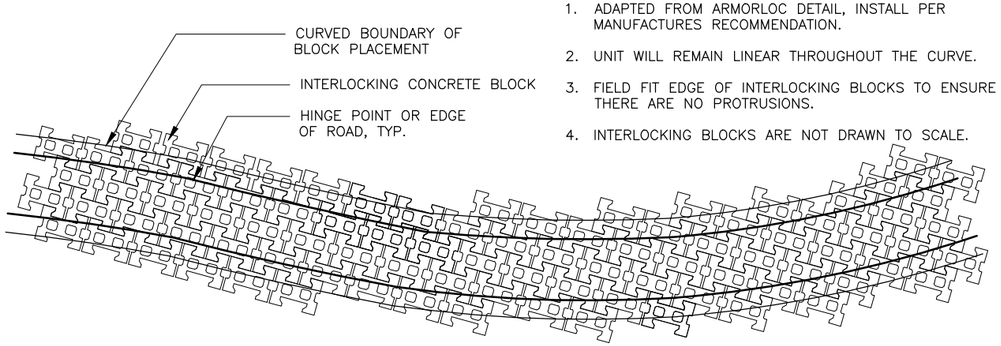

NOTES:

1. ADAPTED FROM ARMORLOC DETAIL, INSTALL PER MANUFACTURES RECOMMENDATION.
2. UNIT WILL REMAIN LINEAR THROUGHOUT THE CURVE.
3. FIELD FIT EDGE OF INTERLOCKING BLOCKS TO ENSURE THERE ARE NO PROTRUSIONS.
4. INTERLOCKING BLOCKS ARE NOT DRAWN TO SCALE.

PLAN
NTS

5 INTERLOCKING CONCRETE BLOCKS ON CURVE

interlockingConcreteBlocks_8

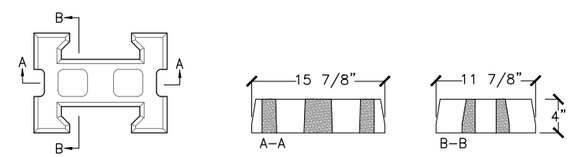

PLAN
NTS

SECTION
NTS

NOTES:

1. ADAPTED FROM ARMORLOC DETAILS, INSTALL PER MANUFACTURES RECOMMENDATION.
2. GEOTEXTILE FABRIC EXTENDS ONE FOOT BEYOND THE TOP AND BOTTOM OF THE BLOCK TERMINATION POINTS.

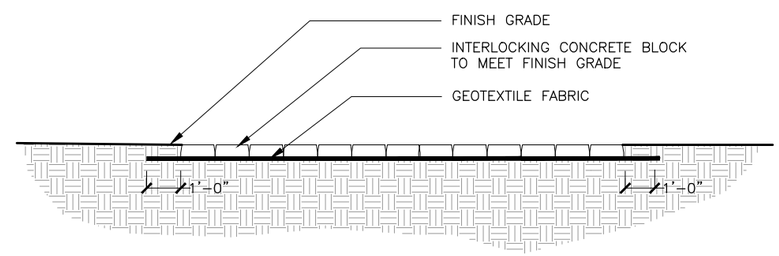

SECTION
NTS

2 INTERLOCKING CONCRETE BLOCKS

concrete mat_8

H. T. HARVEY & ASSOCIATES
ECOLOGICAL CONSULTANTS

REVISIONS	DATE

APPROVED BY
REGISTERED LANDSCAPE ARCHITECT JOSEPH M. HOWARD 4598 Exp. 12/31/12 STATE OF CALIFORNIA

East Bay Regional Park District
East Bay Regional Park District
2950 Peralta Oaks Court
Oakland, CA 94605
P: 888-327-2757

UPPER HESS CREEK RESTORATION PROJECT
East Contra Costa County, California
GRADING DETAILS

Submittal: BID DOCUMENT
Scale: NTS
Date: 05/23/11
Drawn By: RB,LD,CJ
Checked By: JH,MQ,DS
File No.: 2927-05

SHEET L5.14
21 OF 30 SHEETS

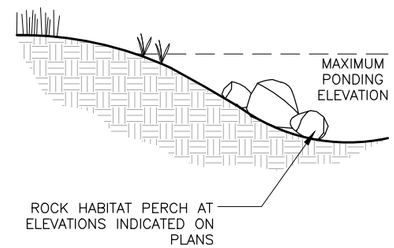

NOTES:
1. EACH ROCK HABITAT PERCH SHALL CONSIST OF THREE PLACED BOULDERS. ONE SHALL BE MINIMUM 3' DIAMETER ROUND AND THE REMAINING TWO SHALL BE MINIMUM 1'–6" BY 2'–0" IN DIMENSION.

2. SITUATE BOULDERS IN A STABLE CONFIGURATION. WHERE POSSIBLE, LEAN SMALLER BOULDERS AGAINST LARGER BOULDER TO CREATE VOIDS FOR REFUGE.

SECTION
NTS

1 ROCK HABITAT PERCH

frog perch_16

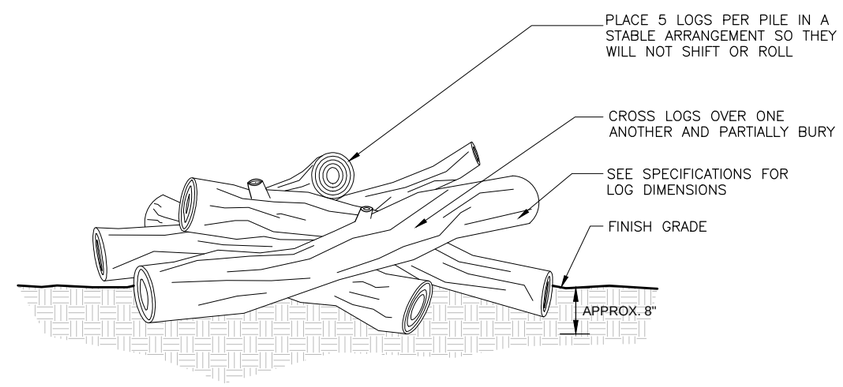

SECTION
NTS

2 COARSE WOODY DEBRIS

coarse woody debris

H. T. HARVEY & ASSOCIATES
ECOLOGICAL CONSULTANTS

REVISIONS	DATE

APPROVED BY
REGISTERED LANDSCAPE ARCHITECT
JOSEPH M. HOWARD
4598
Exp. 12/31/12
STATE OF CALIFORNIA

East Bay Regional Park District
East Bay Regional Park District
2950 Peralta Oaks Court
Oakland, CA 94605
P: 888–327–2757

UPPER HESS CREEK
RESTORATION PROJECT
East Contra Costa County, California
– – – – – – –
HABITAT FEATURE DETAILS

Submittal: BID DOCUMENT
Scale: NTS
Date: 05/23/11
Drawn By: RB,LD,CJ
Checked By: JH,MQ,DS
File No.: 2927–05

SHEET **L5.15**
22 OF 30 SHEETS

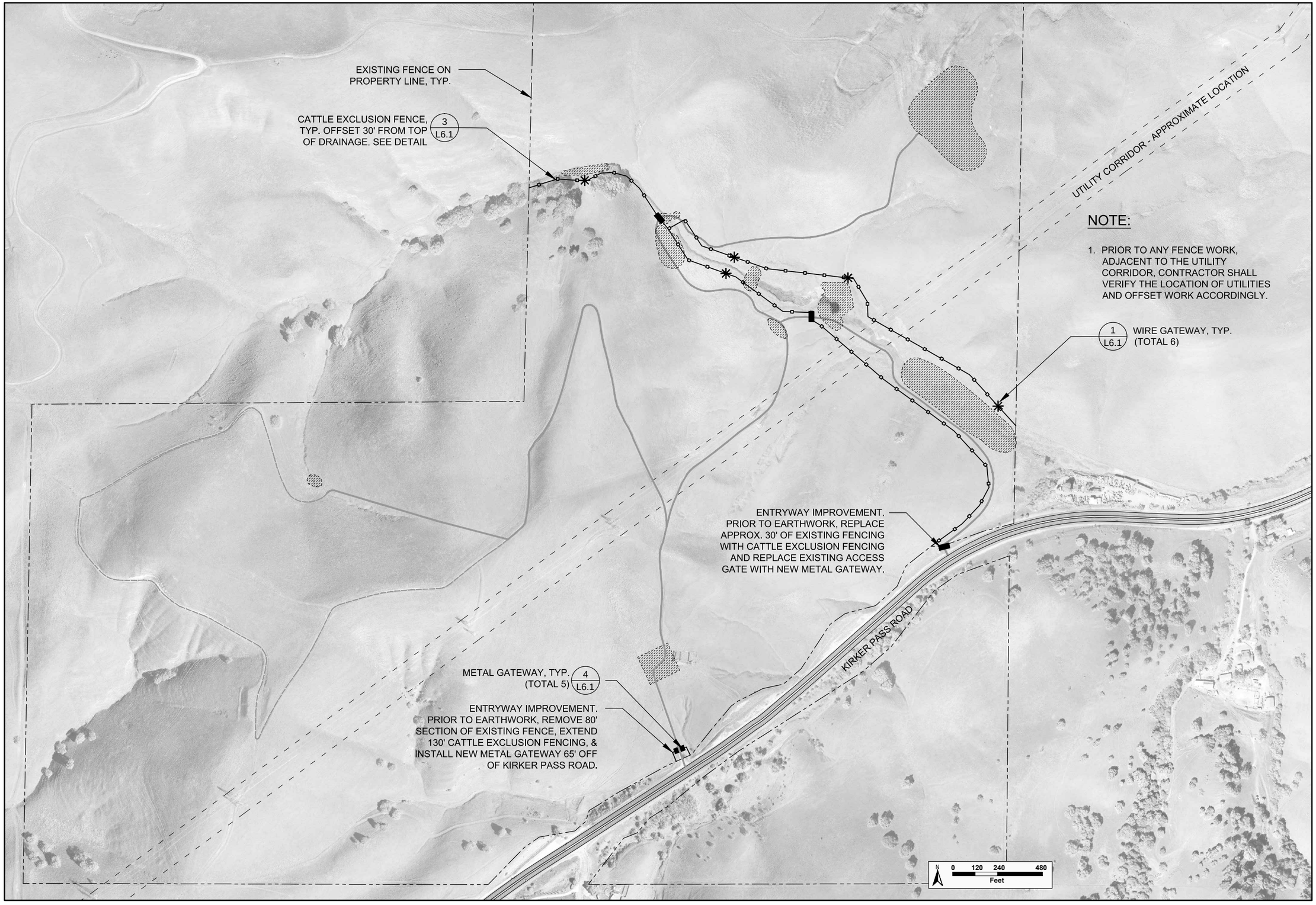

NOTE:

1. PRIOR TO ANY FENCE WORK, ADJACENT TO THE UTILITY CORRIDOR, CONTRACTOR SHALL VERIFY THE LOCATION OF UTILITIES AND OFFSET WORK ACCORDINGLY.

H. T. HARVEY & ASSOCIATES
ECOLOGICAL CONSULTANTS

REVISIONS	DATE

APPROVED BY
REGISTERED LANDSCAPE ARCHITECT JOSEPH M. EDWARDS 4598 Exp. 12/31/12 STATE OF CALIFORNIA

East Bay Regional Park District

East Bay Regional Park District
2950 Peralta Oaks Court
Oakland, CA 94605
P: 888-327-2757

UPPER HESS CREEK
RESTORATION PROJECT

East Contra Costa County, California

SITE INTALLATION & CATTLE EXCLUSION FENCE PLAN

Submittal: BID DOCUMENT
Scale: see drawing
Date: 05/23/11
Drawn By: RB,LD,CJ
Checked By: JH,MQ,DS
File No.: 2927-05

SHEET **L6.0**
23 OF 30 SHEETS

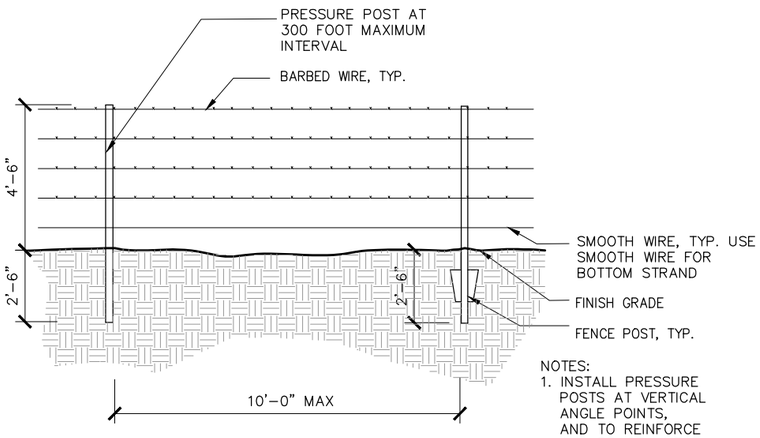

NOTES:
1. INSTALL PRESSURE POSTS AT VERTICAL ANGLE POINTS, AND TO REINFORCE AND BRACE LINEAR SECTIONS AS NEEDED.

ELEVATION
NTS

3 CATTLE EXCLUSION FENCE

cattle exclusion fencing NVC_english

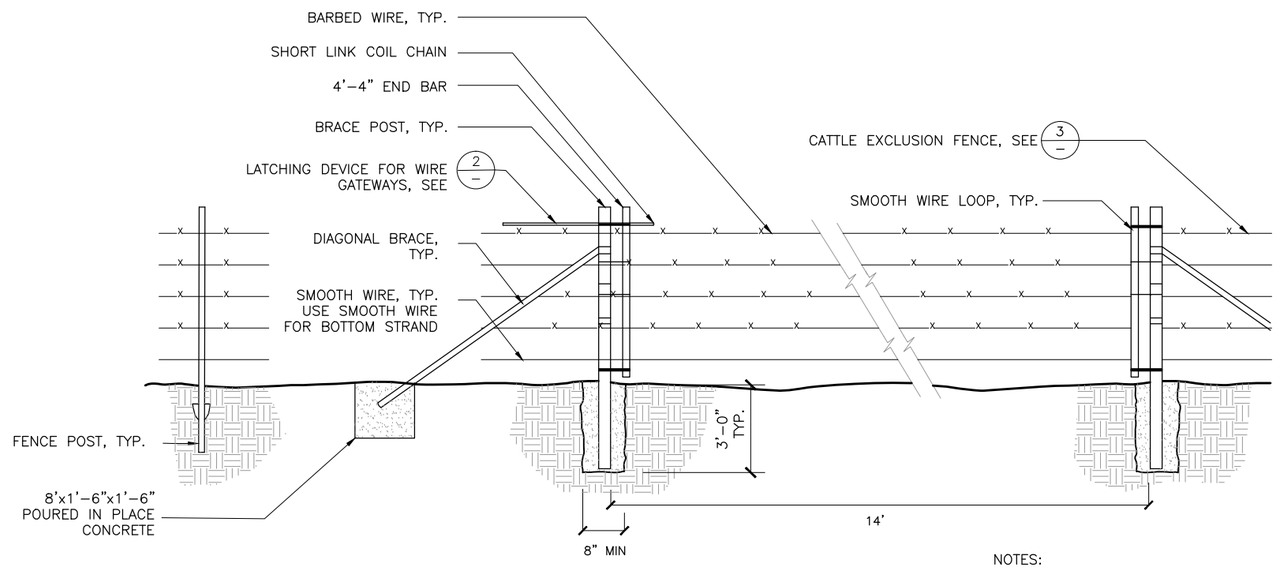

NOTES:
1. DETAIL MODIFIED FROM CALTRANS STANDARD DRAWINGS – BARBED WIRE AND WIRE MESH FENCES #A86.

SECTION
NTS

1 WIRE GATEWAY

gateway_24

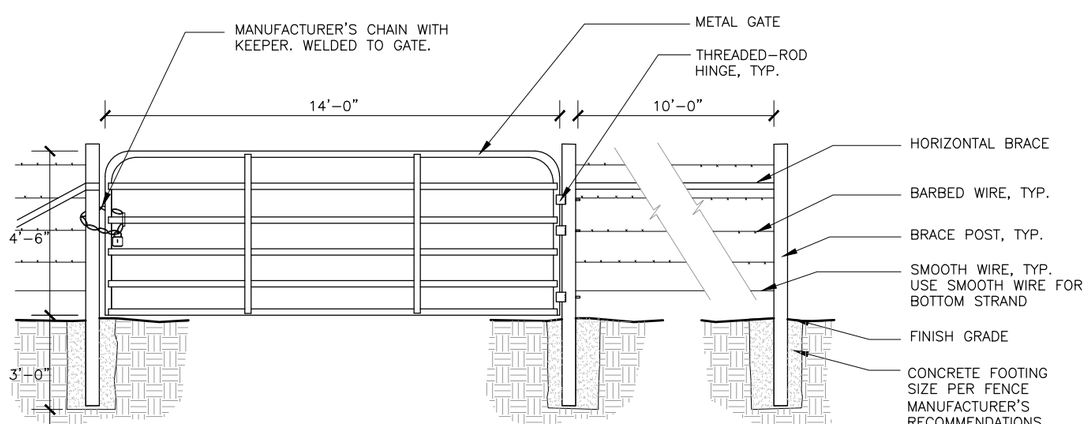

NOTES:
1. DETAIL ADAPTED FROM POWDER RIVER CLASSIC FENCE.

SECTION
NTS

4 METAL GATEWAY

metal fence_24

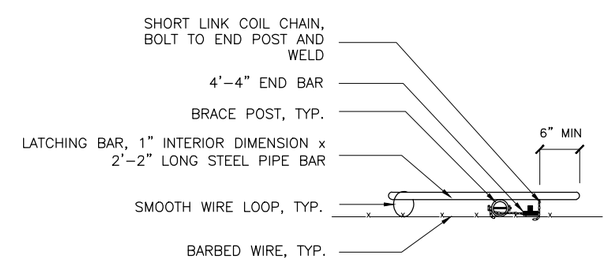

NOTES:
1. DETAIL MODIFIED FROM CALTRANS STANDARD DRAWINGS, BARBED WIRE AND WIRE MESH FENCES #A86.

PLAN
NTS

2 LATCHING DEVICE FOR WIRE GATEWAYS

gateway – latching device_24

H. T. HARVEY & ASSOCIATES
ECOLOGICAL CONSULTANTS

REVISIONS	DATE

APPROVED BY
REGISTERED LANDSCAPE ARCHITECT
JOSEPH M. HOWARD
4598
Exp. 12/31/12
STATE OF CALIFORNIA

East Bay Regional Park District
East Bay Regional Park District
2950 Peralta Oaks Court
Oakland, CA 94605
P: 888-327-2757

UPPER HESS CREEK
RESTORATION PROJECT
East Contra Costa County, California

CATTLE EXCLUSION FENCE DETAILS

Submittal: BID DOCUMENT
Scale: NTS
Date: 03/23/11
Drawn By: RB,LD,CJ
Checked By: JH,MQ,DS
File No.: 2927-05

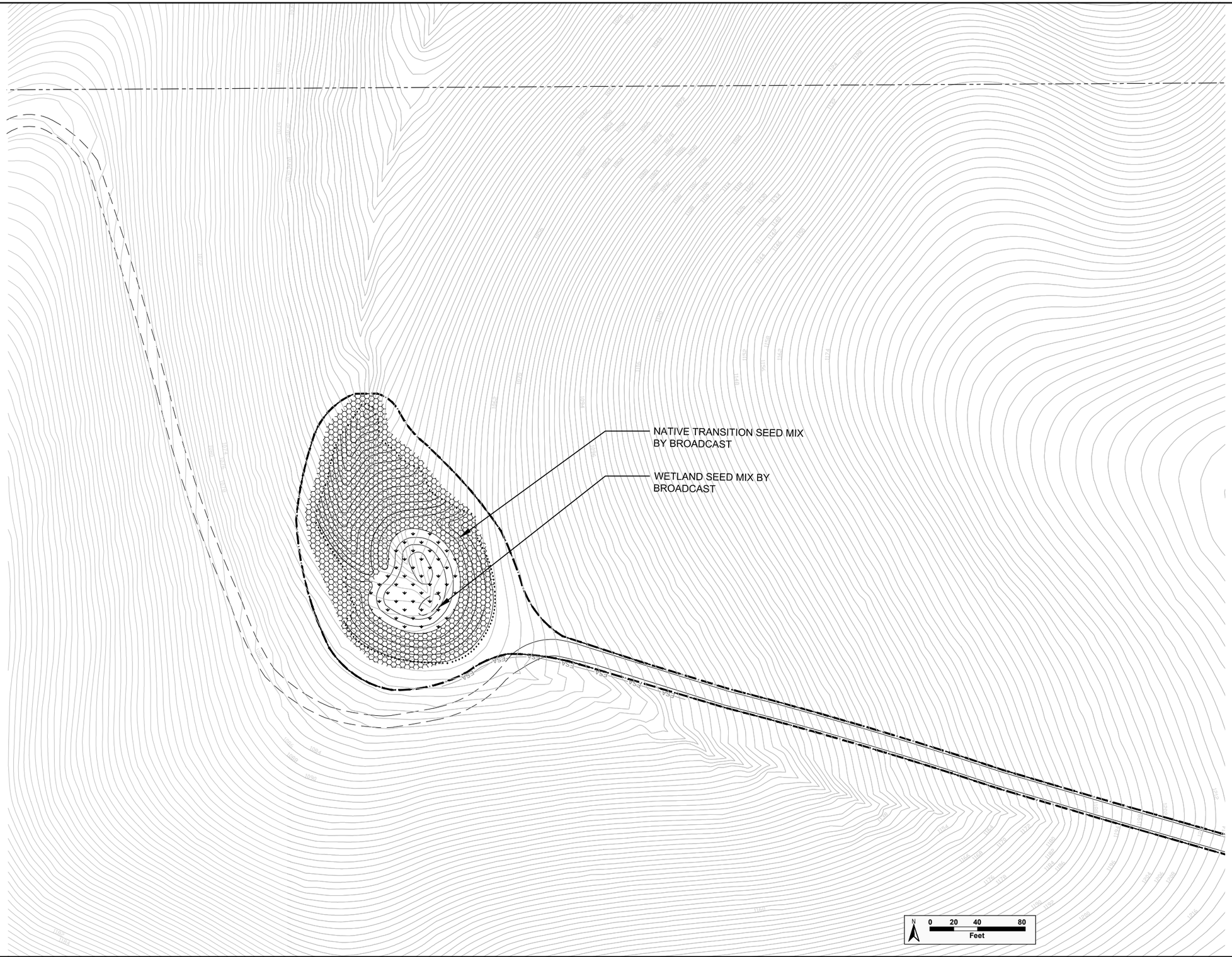

H. T. HARVEY & ASSOCIATES
ECOLOGICAL CONSULTANTS

REVISIONS	DATE

APPROVED BY

REGISTERED LANDSCAPE ARCHITECT
JOSEPH M. HOWARD
4598
Exp. 12/31/12
STATE OF CALIFORNIA

East Bay Regional Park District

East Bay Regional Park District
2950 Peralta Oaks Court
Oakland, CA 94605
P: 888-327-2757

UPPER HESS CREEK
RESTORATION PROJECT

East Contra Costa County, California

- - - - - - -

SEEDING PLAN - CTS POND

Submittal: BID DOCUMENT
Scale: see drawing
Date: 05/23/11
Drawn By: RB,LD,CJ
Checked By: JH,MQ,DS
File No.: 2927-05

SHEET **L7.0**
25 OF 30 SHEETS

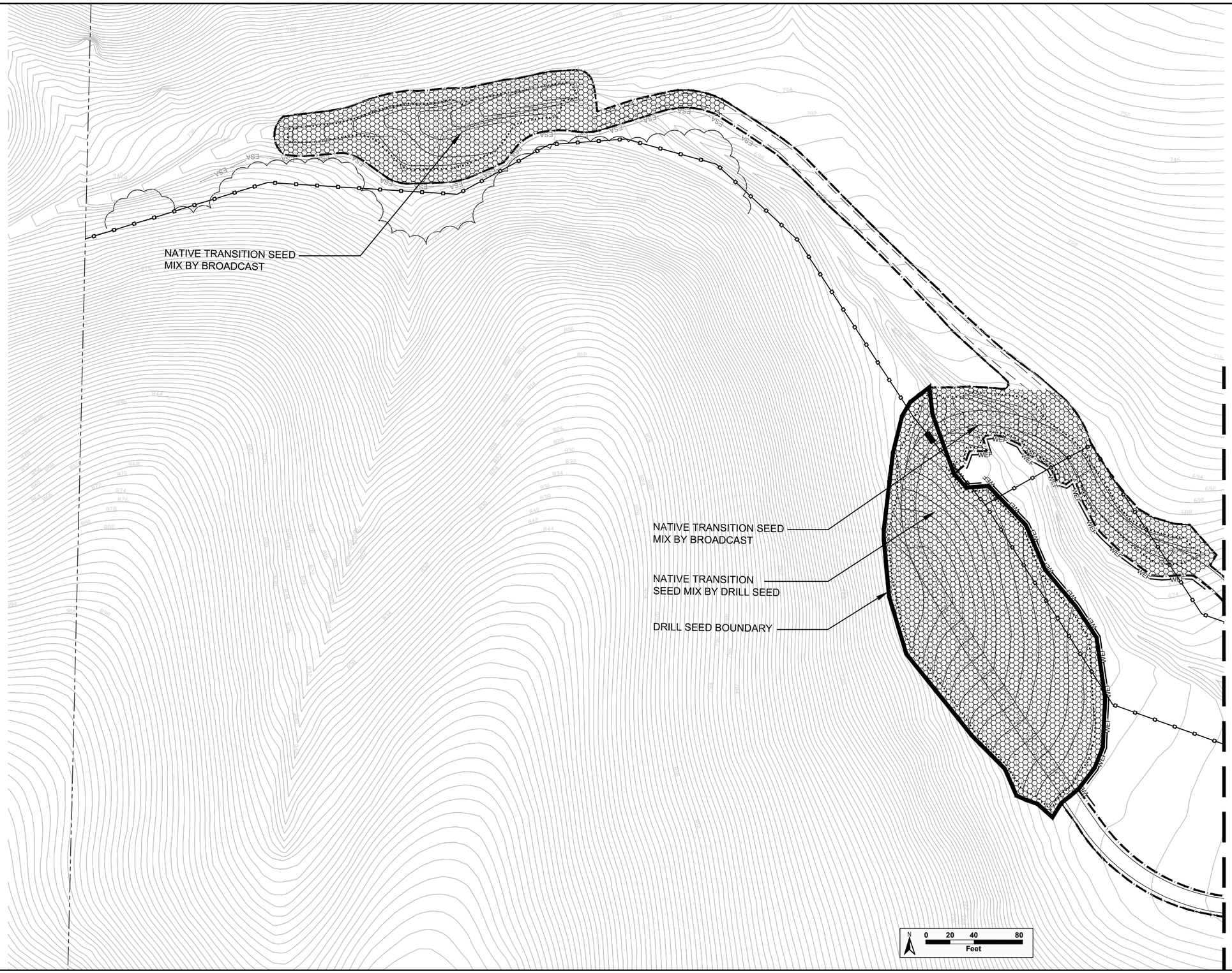

H. T. HARVEY & ASSOCIATES
ECOLOGICAL CONSULTANTS

REVISIONS	DATE

APPROVED BY
REGISTERED LANDSCAPE ARCHITECT
JOSEPH M. HOWARD
4598
Exp. 12/31/12
STATE OF CALIFORNIA

East Bay Regional Park District

East Bay Regional Park District
2950 Peralta Oaks Court
Oakland, CA 94605
P: 888-327-2757

UPPER HESS CREEK
RESTORATION PROJECT

East Contra Costa County, California

SEEDING PLAN -
UPPER STOCK POND &
RANCH ROAD CROSSING

Submittal: BID DOCUMENT
Scale: see drawing
Date: 05/23/11
Drawn By: RB,LD,CJ
Checked By: JH,MQ,DS
File No.: 2927-05

SHEET **L7.1**
26 OF 30 SHEETS

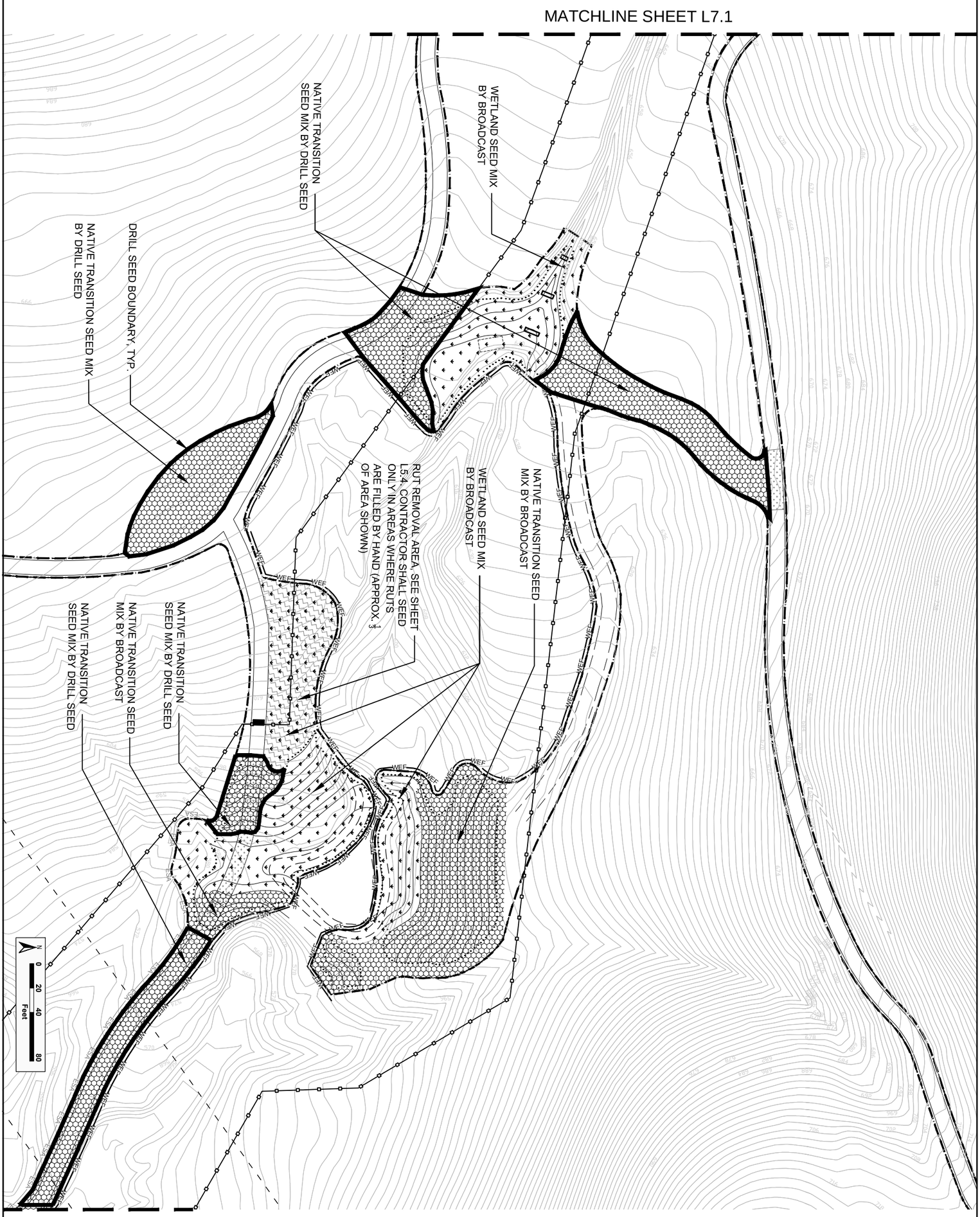

SHEET L7.2 27 OF 30 SHEETS	Submittal: BID DOCUMENT Scale: see drawing Date: 05/23/11 Drawn By: RB,LD,CJ Checked By: JH,MQ,DS File No.: 2927–05	UPPER HESS CREEK RESTORATION PROJECT East Contra Costa County, California **SEEDING PLAN - CHANNEL RESTORATION AREA & MAIN STOCK POND**	East Bay Regional Park District East Bay Regional Park District 2950 Peralta Oaks Court Oakland, CA 94605 P: 888–327–2757	APPROVED BY REGISTERED LANDSCAPE ARCHITECT JOSEPH M. HOWARD 4598 Exp. 12/31/12 STATE OF CALIFORNIA	REVISIONS / DATE H. T. HARVEY & ASSOCIATES ECOLOGICAL CONSULTANTS

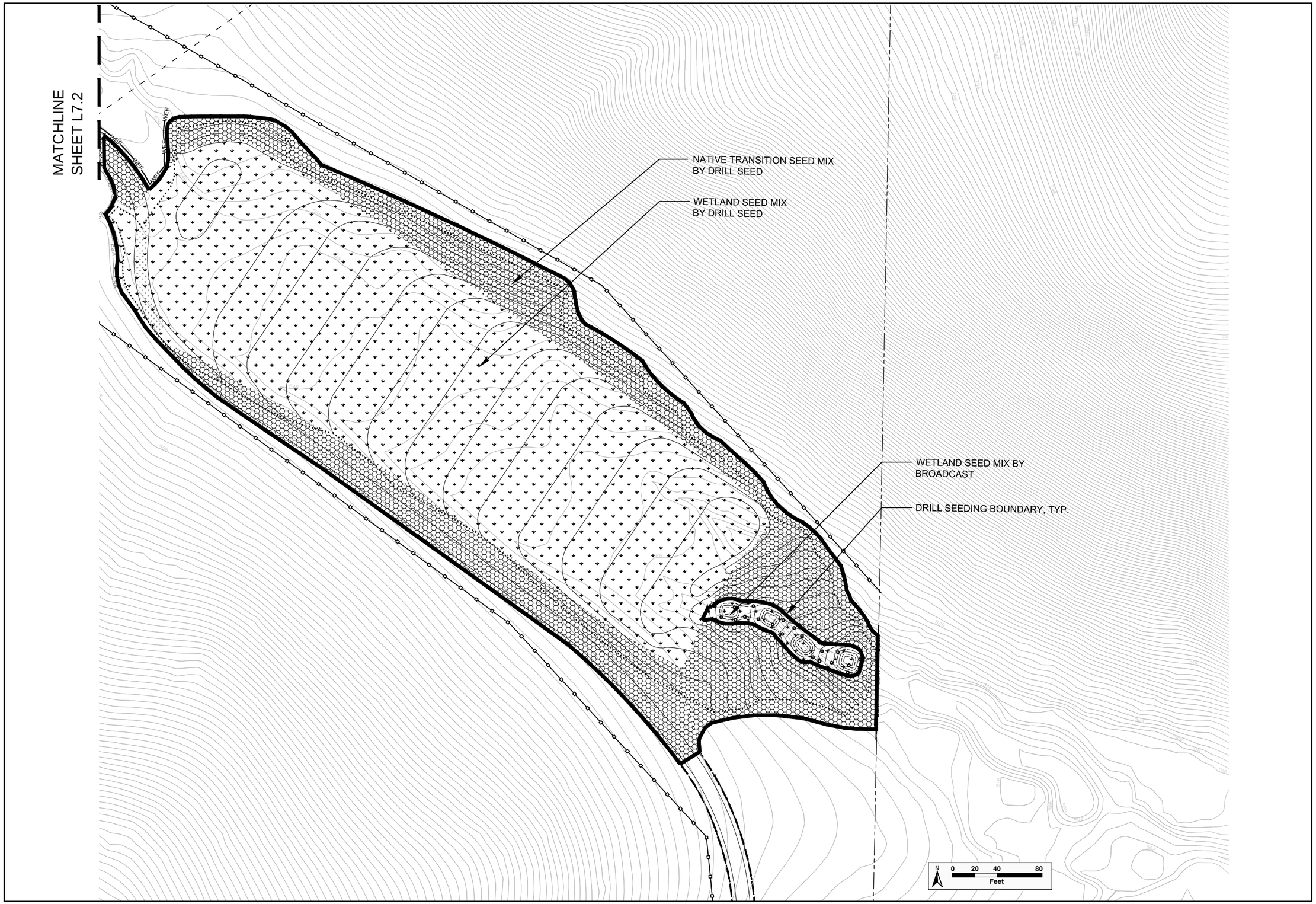

H. T. HARVEY & ASSOCIATES
ECOLOGICAL CONSULTANTS

REVISIONS	DATE

APPROVED BY
REGISTERED LANDSCAPE ARCHITECT
JOSEPH M. HOWARDS
4598
Exp. 12/31/12
STATE OF CALIFORNIA

East Bay
Regional Park District

East Bay Regional Park District
2950 Peralta Oaks Court
Oakland, CA 94605
P: 888-327-2757

UPPER HESS CREEK
RESTORATION PROJECT

East Contra Costa County, California

- - - - - - -

SEEDING PLAN -
ALLUVIAL VALLEY

Submittal: BID DOCUMENT
Scale: see drawing
Date: 05/23/11
Drawn By: RB,LD,CJ Checked By: JH,MQ,DS
File No.: 2927-05

SHEET **L7.3**
28 OF 30 SHEETS

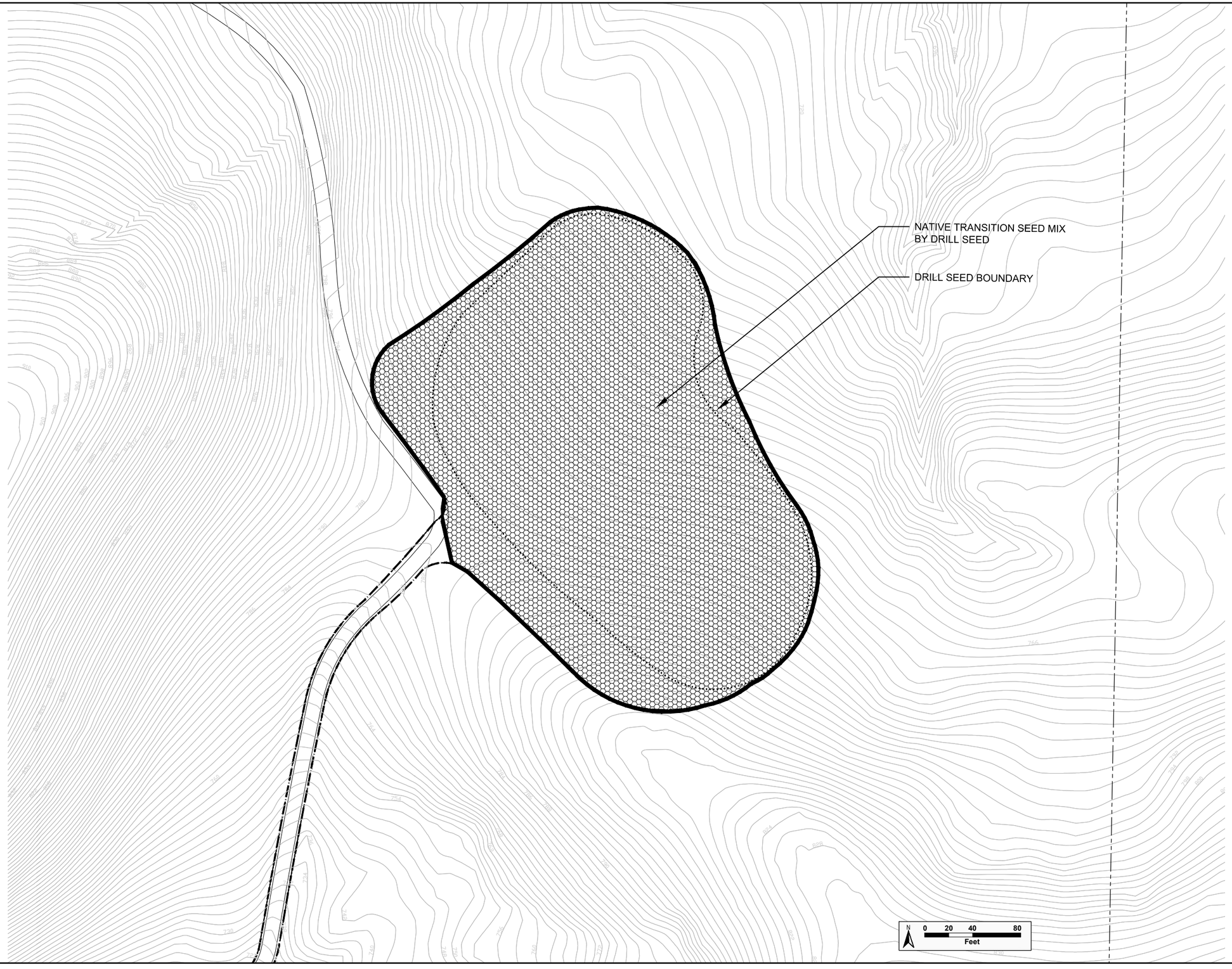

H. T. HARVEY & ASSOCIATES
ECOLOGICAL CONSULTANTS

REVISIONS	DATE

APPROVED BY
REGISTERED LANDSCAPE ARCHITECT
JOSEPH M. HOWARDS
4598
Exp. 12/31/12
STATE OF CALIFORNIA

East Bay
Regional Park District

East Bay Regional Park District
2950 Peralta Oaks Court
Oakland, CA 94605
P: 888-327-2757

UPPER HESS CREEK
RESTORATION PROJECT

East Contra Costa County, California

SEEDING PLAN - CLAY BORROW AREA

Submittal: BID DOCUMENT
Scale: see drawing
Date: 05/23/11
Drawn By: RB,LD,CJ Checked By: JH,MQ,DS
File No.: 2927-05

SHEET **L7.4**
29 OF 30 SHEETS

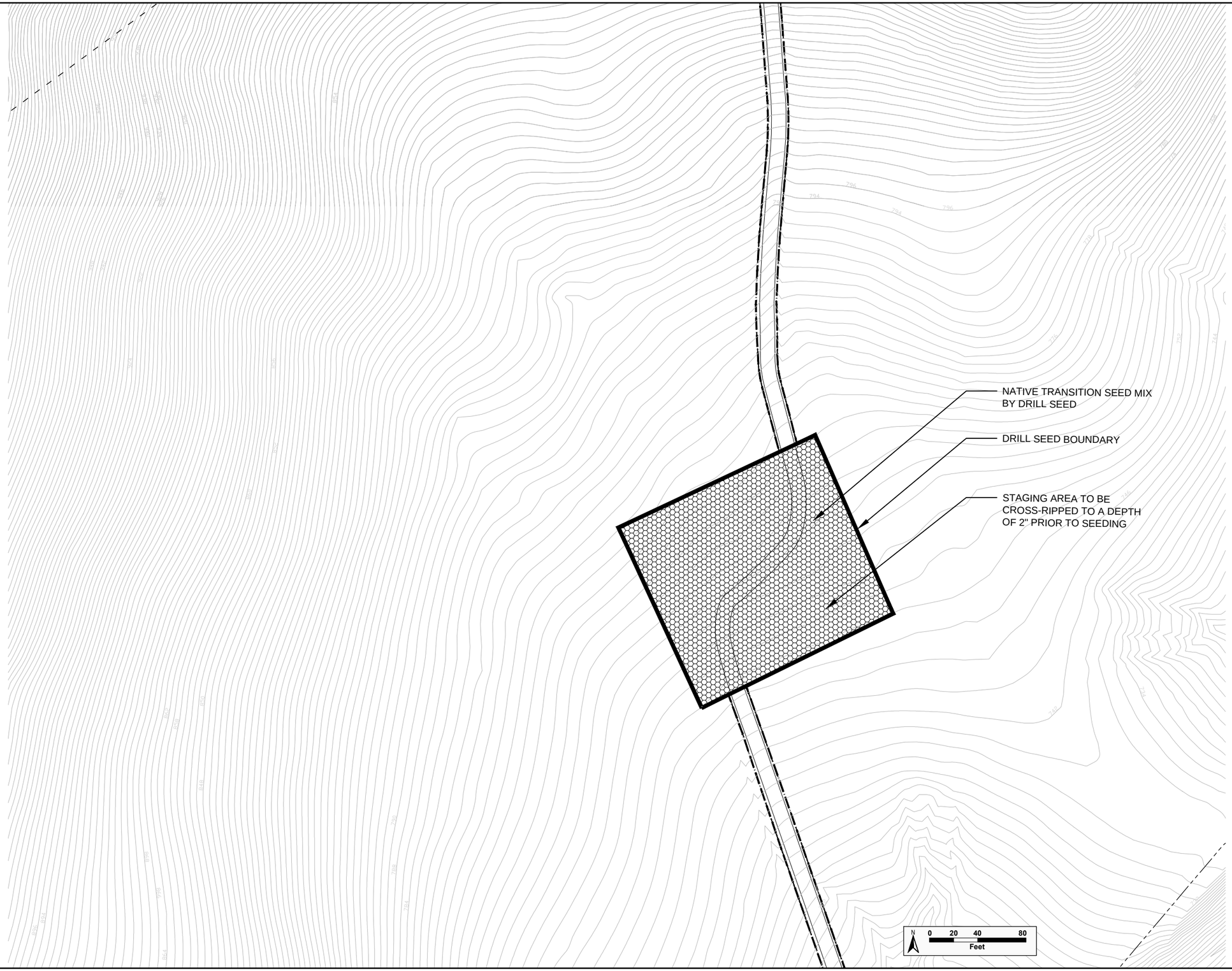

H. T. HARVEY & ASSOCIATES
ECOLOGICAL CONSULTANTS

REVISIONS	DATE

APPROVED BY

REGISTERED LANDSCAPE ARCHITECT
JOSEPH M. HOWARDS
4598
Exp. 12/31/12
STATE OF CALIFORNIA

East Bay
Regional Park District

East Bay Regional Park District
2950 Peralta Oaks Court
Oakland, CA 94605
P: 888-327-2757

UPPER HESS CREEK
RESTORATION PROJECT

East Contra Costa County, California

SEEDING PLAN -
ADDITIONAL PROJECT
STAGING AREA

Submittal:
BID DOCUMENT

Scale:
see drawing

Date:
05/23/11

Drawn By:
RB,LD,CJ

Checked By:
JH,MQ,DS

File No.:
2927-05

SHEET **L7.5**
30 OF 30 SHEETS