Sheet Index

SHEET #	SHEET NAME	SHEET DESCRIPTION
1	C-1	COVER - PROJECT LOCATION AND SHEET INDEX
2	SA-1	SITE ACCESS
3	SP-1	SITE PREPARATION
4	G-1	GRADING PLAN
5	P-1	PLANTING PLAN
6	P-2	PLANTING PROGRAM
7	F-1	FENCING PLAN
8	D-1	DETAILS
9	D-2	DETAILS

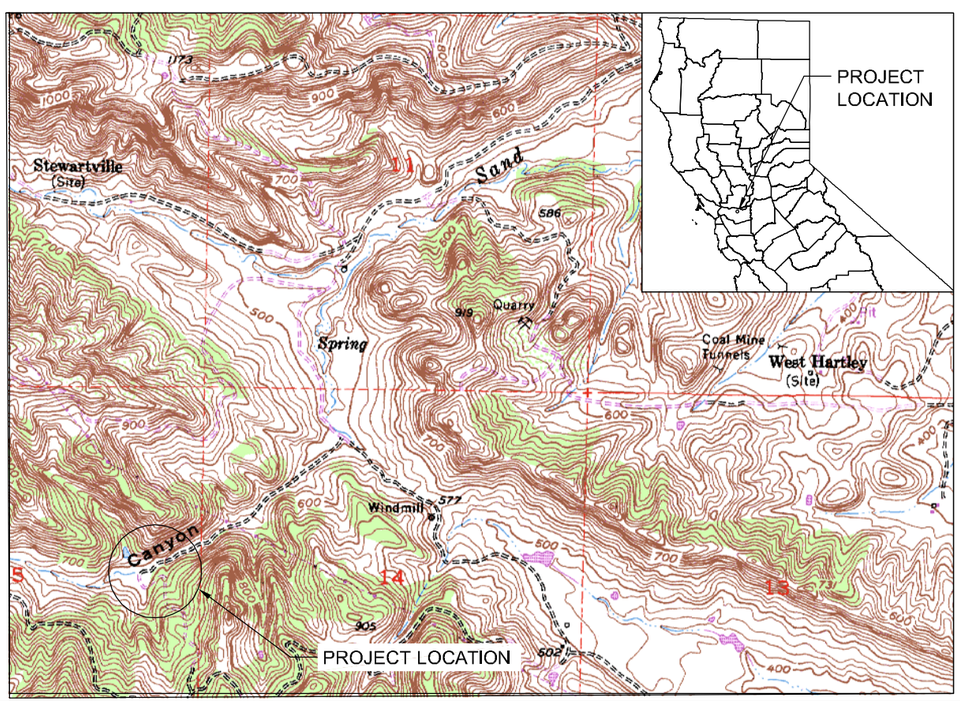

CONSTRUCTION PLANS

FOR

LENTZNER SPRINGS WETLAND RESTORATION

BLACK DIAMOND MINES REGIONAL PRESERVE

DRAFT 100% - JUNE 18, 2008

PREPARED FOR:

EAST BAY REGIONAL PARK DISTRICT
2950 PERALTA OAKS COURT
OAKLAND, CA 94605

APPROVED BY:

NAME
COMPANY
PHONE #

DATE

NAME
COMPANY
PHONE#

DATE

REGISTERED PROFESSIONAL ENGINEER
STEVEN R. SEVILLE
No. 60513
Exp: 06/30/08
CIVIL
STATE OF CALIFORNIA

STEVE SEVILLE
JONES & STOKES

CALIFORNIA REGISTERED PROFESSIONAL ENGINEER NO. 60513

DATE

LICENSED LANDSCAPE ARCHITECT
Jennifer L. Stock - Lic. # 5155
Signature
05/31/07
Renewal Date
Date
STATE OF CALIFORNIA

JENNIFER STOCK
JONES & STOKES

CALIFORNIA LICENSED LANDSCAPE ARCHITECT NO. 5155

DATE

DESIGNED BY: AA
CAD BY: AA
CHECKED BY: AA
DATE: 06/18/08
JOB NO. 03142.08

REV.	DATE	DESCRIPTION	BY	APPD

Jones & Stokes
an EDAW Transportation Company
2600 Capitol Avenue, Sacramento, CA 95816

LENTZNER SPRINGS
BLACK DIAMOND MINES REGIONAL PRESERVE

EAST CONTRA COSTA COUNTY

COVER SHEET

C-1

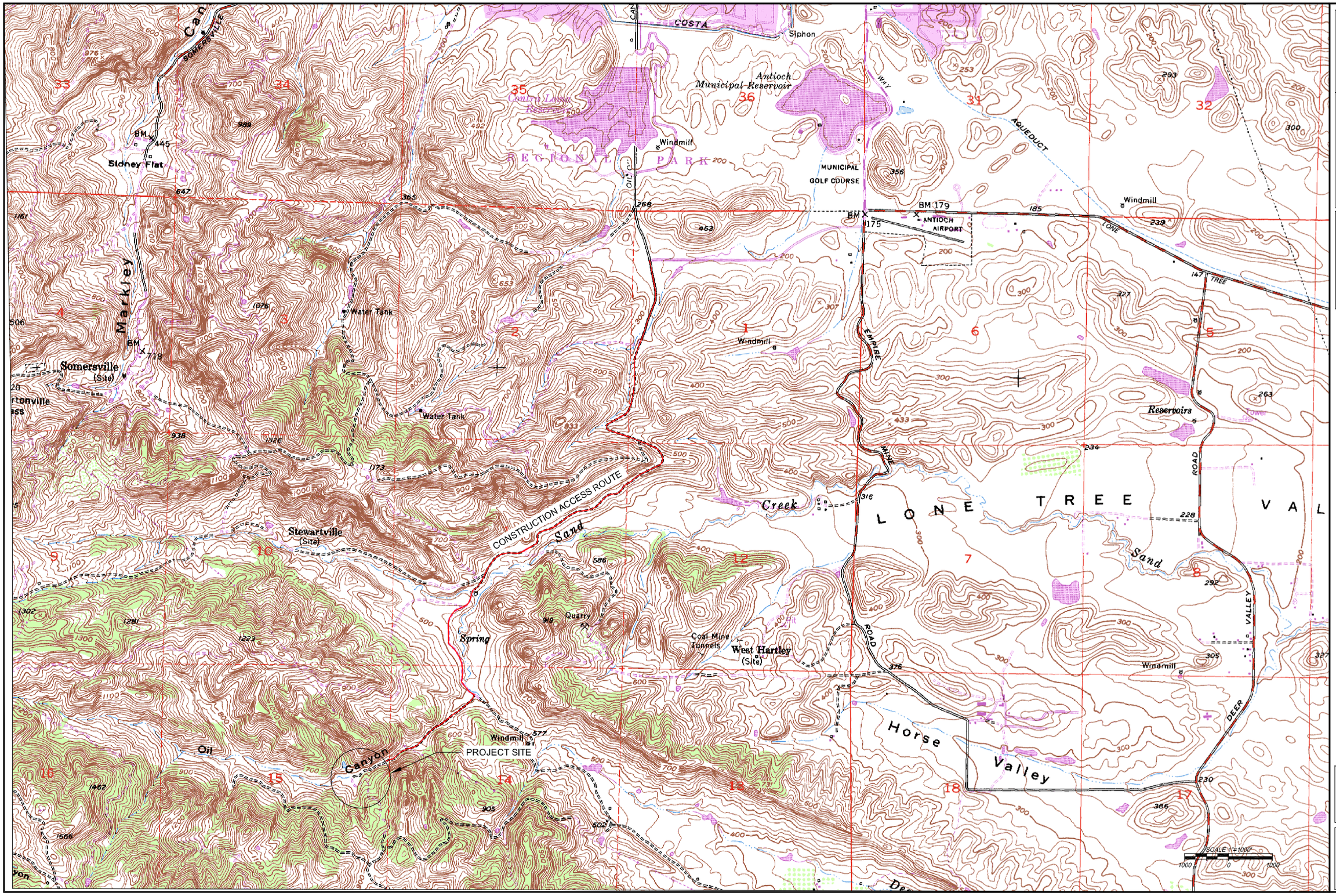

DESIGNED BY: AA	DATE: 05/18/08
CAD BY: AA	JOB NO. 00142.08
CHECKED BY: AA	

REV.	DATE	DESCRIPTION	BY	APPD

Jones & Stokes

Additional Logo Here

LENTZNER SPRINGS
BLACK DIAMOND MINES REGIONAL PRESERVE

EAST CONTRA COSTA COUNTY

SITE ACCESS

SA-1

2 OF 9

DESIGNED BY: KM
CAD BY: AA
CHECKED BY: KM/JS/SS
DATE: 07/17/08
JOB NO. 00142.08

REV.	DATE	DESCRIPTION	BY	APP'D

ICF Jones & Stokes
630 K Street, Suite 400, Sacramento, CA 95814

LENTZNER SPRINGS
BLACK DIAMOND MINES REGIONAL PRESERVE

EAST CONTRA COSTA COUNTY

SITE PREPARATION PLAN

ADDENDUM #1

SP-1

3 OF 9

DESIGNED BY: KM
CAD BY: AA
CHECKED BY: KM/JS/SS
DATE: 07/09/08
JOB NO. 00142.08

REV.	DATE	DESCRIPTION	BY	APP'D

ICF Jones & Stokes
An ICF International Company
630 K Street, Suite 400, Sacramento, CA 95814

LENTZNER SPRINGS
BLACK DIAMOND MINES REGIONAL PRESERVE

EAST CONTRA COSTA COUNTY

GRADING PLAN

ADDENDUM #1

G-1

4 OF 9

DESIGNED BY: AA	DATE: 05/18/08
CAD BY: AA	JOB NO. 03142.08
CHECKED BY: AA	

REV.	DATE	DESCRIPTION	BY	APPD

ICF Jones & Stokes
an ICF International Company
811 Parkcenter Drive, Vacaville, CA 95914

LENTZNER SPRINGS
BLACK DIAMOND MINES REGIONAL PRESERVE

EAST CONTRA COSTA COUNTY

PLANTING PLAN

P-1

5 OF 9

PLANTING PROGRAM OVERVIEW

PLAN VIEW SYMBOL	PLANTING ZONE	SPECIES NAME		AVERAGE ZONE PLANT ON CENTER SPACING	PROPAGULE TYPE	QUANTITY
		BOTANICAL	COMMON			
	NATIVE GRASSLAND	NASELLA PULCHRA	PURPLE NEEDLEGRASS	-	SEED	-
		LEYMUS TRITICOIDES	CREEPING WILDRYE	-	SEED	-
		HORDEUM BRACHYANTHERUM	MEADOW BARLEY	-	SEED	-
	ALKALI WETLAND	DISTICHLIS SPICATA	SALTGRASS	2'	PLUG	1,245
		FRANKENIA SALINA	ALKALI HEATH	2'	PLUG	405
		ELIOCHARIS MACROSTACHYA	SPIKE RUSH	2'	PLUG	87

DESIGNED BY: KM
CAD BY: AA
CHECKED BY: KM/JS/SS
DATE: 07/17/08
JOB NO. 00142.08

REV.	DATE	DESCRIPTION	BY	APP'D

ICF Jones & Stokes
An ICF International Company
630 K Street, Suite 400, Sacramento, CA 95814

LENTZNER SPRINGS
BLACK DIAMOND MINES REGIONAL PRESERVE

EAST CONTRA COSTA COUNTY

PLANTING PROGRAM

ADDENDUM
P-2

DESIGNED BY: KM
CAD BY: AA
CHECKED BY: KM/JS/SS

DATE: 07/17/08
JOB NO. 00142.08

ICF Jones & Stokes
An ICF International Company
630 K Street, Suite 400, Sacramento, CA 95814

REV.	DATE	DESCRIPTION	BY	APP'D

LENTZNER SPRINGS
BLACK DIAMOND MINES REGIONAL PRESERVE

EAST CONTRA COSTA COUNTY

FENCING PLAN

ADDENDUM #1

F-1

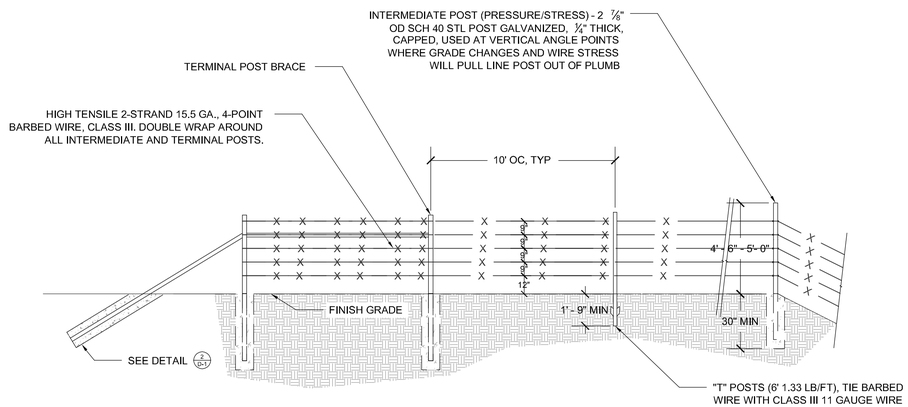

NOTES:

1. ALL WELDS TO BE GROUND SMOOTH AND PAINTED WITH ZINC METAL PAINT.
2. USE INTERMEDIATE POSTS AT MID REACHOR AT 300' INTERVALS FOR ALL REACHES EXCEEDING 600'.

1 / D-1 PERMANENT 5-WIRE BARB WIRE FENCE
NOT TO SCALE

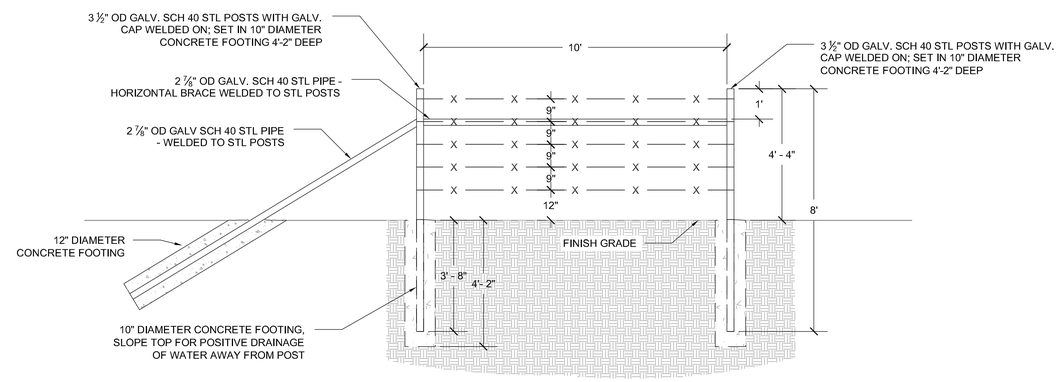

NOTES:

1. ALL WELDS TO BE GROUND SMOOTH AND PAINTED WITH ZINC METAL PAINT.

2 / D-1 TERMINAL BRACE
NOT TO SCALE

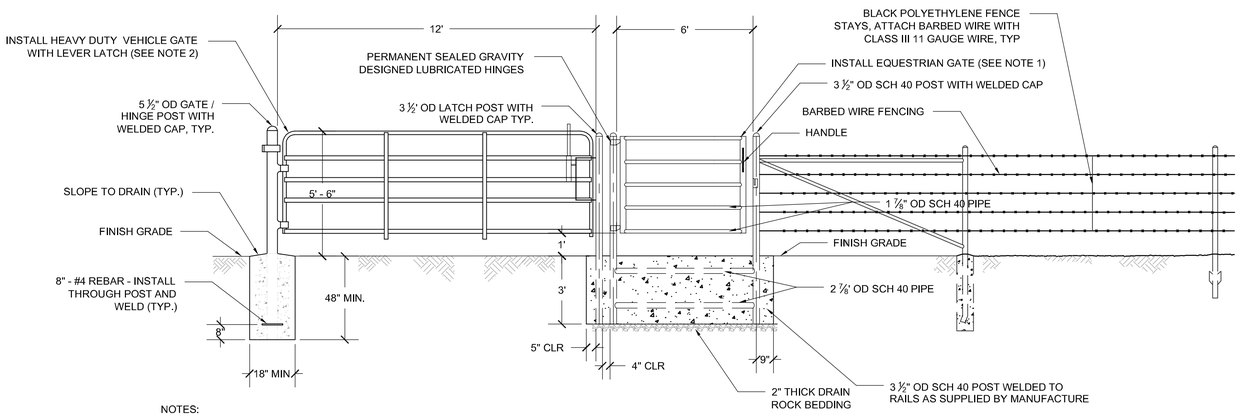

NOTES:

1. EQUESTRIAN GATE TO BE HEAVY DUTY " SOUTHWEST RANGER GATE", AS MANUFACTURED BY SOUTH WEST FENCE AND SUPPLY COMPANY OR EQUAL.
   GATE SHALL BE: 6 FOOT WIDE, IN GREEN COLOR BY MANUFACTURER AS AVAILABLE AT:
   SOUTHWEST FENCE AND SUPPLY CO.
   P.O. BOX 1523
   PATTERSON, CA. 95363
   (800) 843-9623
2. VEHICLE GATE TO BE HEAVY DUTY TUBE GATE, AS MANUFACTURED BY POWDER RIVER COMPANY, OR EQUAL. GATE SHALL BE 14 FOOT WIDE, IN GREEN IN COLOR BY MANUFACTURER AS AVAILABLE AT:
   POWDER RIVER
   (800) 453-5318
   WWW.POWDERRIVER.COM
3. CONCRETE TO BE COMMERCIAL PRE MIX IN BAGS.
4. GATE POSTS AND GATE DO NOT REQUIRE PAINTING UNLESS NOT SUPPLIED BY. MANUFACTURER IN GREEN COLOR.
5. SEE PLANS TO DETERMINE GATE LOCATION. EQUESTRIAN / PEDESTRIAN GATE TO OPEN TOWARDS DOWNHILL SIDE OF GATE.

3 / D-1 VEHICLE GATE
NOT TO SCALE

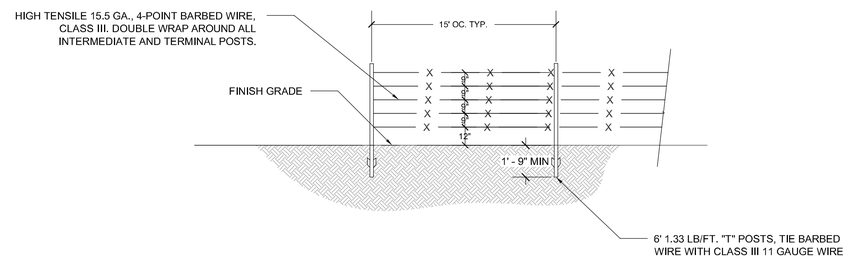

NOTES:

1. ALL WELDS TO BE GROUND SMOOTH AND PAINTED WITH ZINC METAL PAINT.
2. USE INTERMEDIATE POSTS AT MID REACHOR AT 300' INTERVALS FOR ALL REACHES EXCEEDING 600'.

4 / D-1 TEMPORARY BARB-WIRE FENCING
NOT TO SCALE

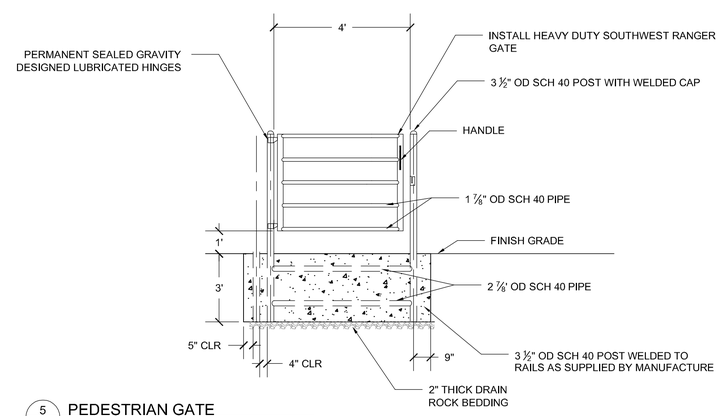

5 / D-1 PEDESTRIAN GATE
NOT TO SCALE

DESIGNED BY: KM	DATE: 07/17/08
CAD BY: AA	JOB NO. 00142.08
CHECKED BY: KM/JS/SS	

REV.	DATE	DESCRIPTION	BY	APP'D

ICF Jones & Stokes
630 K Street, Suite 400, Sacramento, CA 95814

LENTZNER SPRINGS
BLACK DIAMOND MINES REGIONAL PRESERVE

EAST CONTRA COSTA COUNTY

DETAILS

ADDENDUM #1

D-1

8 OF 9

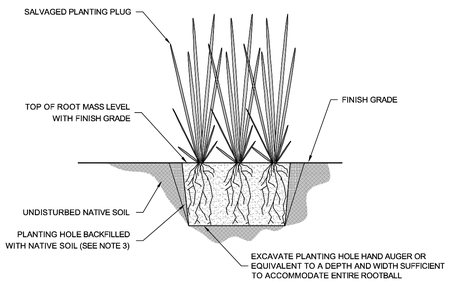

NOTES:
1. PLANTING HOLES FOR PLUGS SHALL BE DEEP ENOUGH TO ACCOMMODATE ROOTS WITHOUT BENDING ROOTS. PLANTING HOLE SHALL ONLY BE LARGE ENOUGH TO ACCOMMODATE ROOT MASS. DO NOT OVER-EXCAVATE.
2. INSTALL SALVAGED PLUG, BACKFILL PLANTING HOLE WITH NATIVE SOIL, AND TAMP WITHOUT DAMAGING OR CRUSHING ROOTS OR PLANT.
3. ROCKS, TRASH OR DEBRIS FOUND IN EXCAVATED SOIL SHALL NOT BE USED TO BACKFILL THE PLANTING HOLE. BACKFILL SOIL SHALL MAKE GOOD CONTACT WITH THE ROOT MASS, LEAVING NO AIR POCKETS.
4. THOROUGHLY WATER IN EACH PLUG WITHIN 2 HOURS OF PLANT INSTALLATION.
5. REFER TO PLANTING SPECIFICATIONS FOR ADDITIONAL INFORMATION.

1 / D-2 SALVAGED PLUG PLANTING
NOT TO SCALE

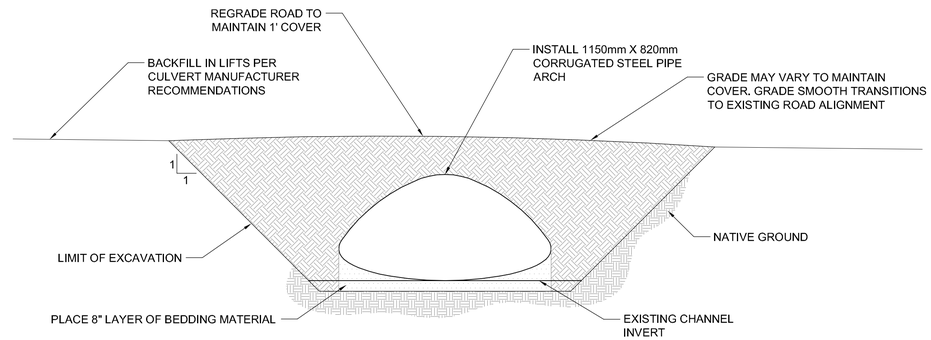

CROSS SECTION

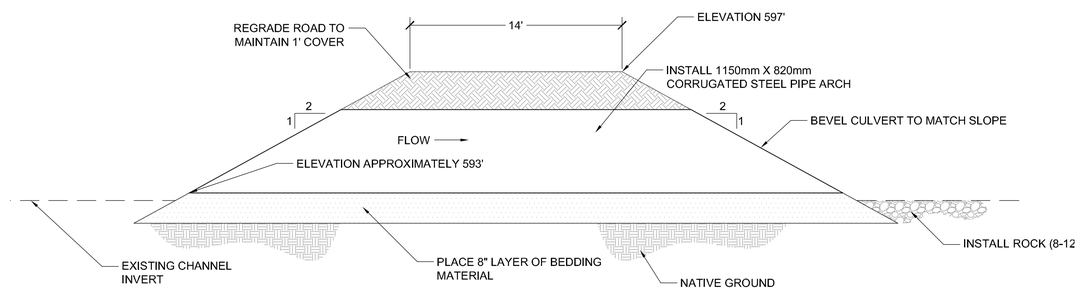

PROFILE

2 / D-2 1150mm x 820mm CORRUGATED STEEL PIPE ARCH
NOT TO SCALE

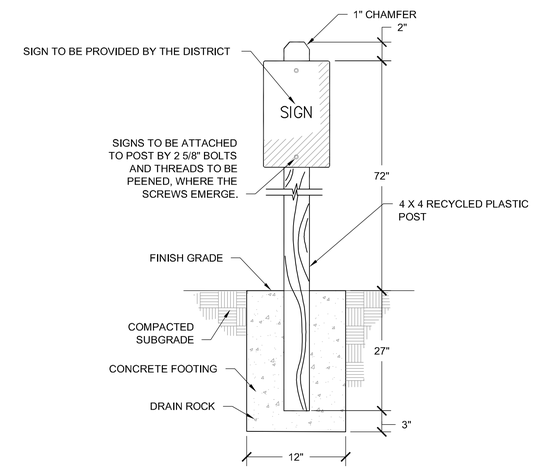

NOTES:
1. CONTRACTOR WILL STAKE SIGN LOCATIONS FOR APPROVAL BEFORE TO INSTALLATION.

3 / D-2 SIGN
NOT TO SCALE

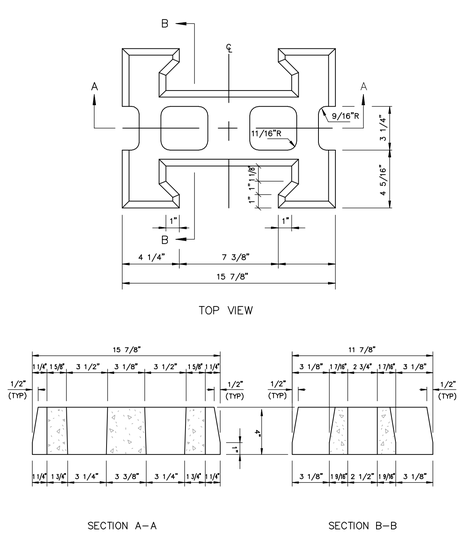

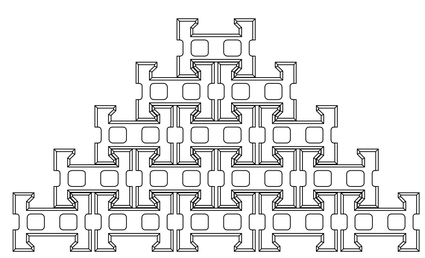

4 / D-2 ARTICULATED CONCRETE MAT
NOT TO SCALE

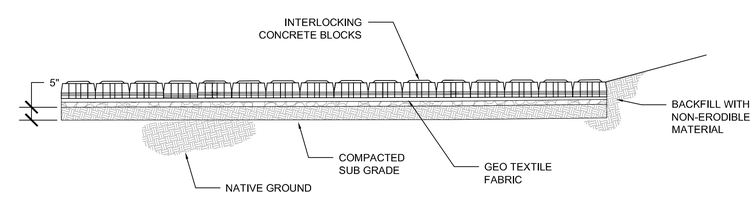

SECTION

DESIGNED BY: KM	DATE: 07/17/08
CAD BY: AA	JOB NO. 00142.08
CHECKED BY: KM/JS/SS	

REV.	DATE	DESCRIPTION	BY	APP'D

ICF Jones & Stokes
An ICF International Company
630 K Street, Suite 400, Sacramento, CA 95814

LENTZNER SPRINGS
BLACK DIAMOND MINES REGIONAL PRESERVE

EAST CONTRA COSTA COUNTY

DETAILS

ADDENDUM #1
D-2
9 OF 9