Contra Costa County

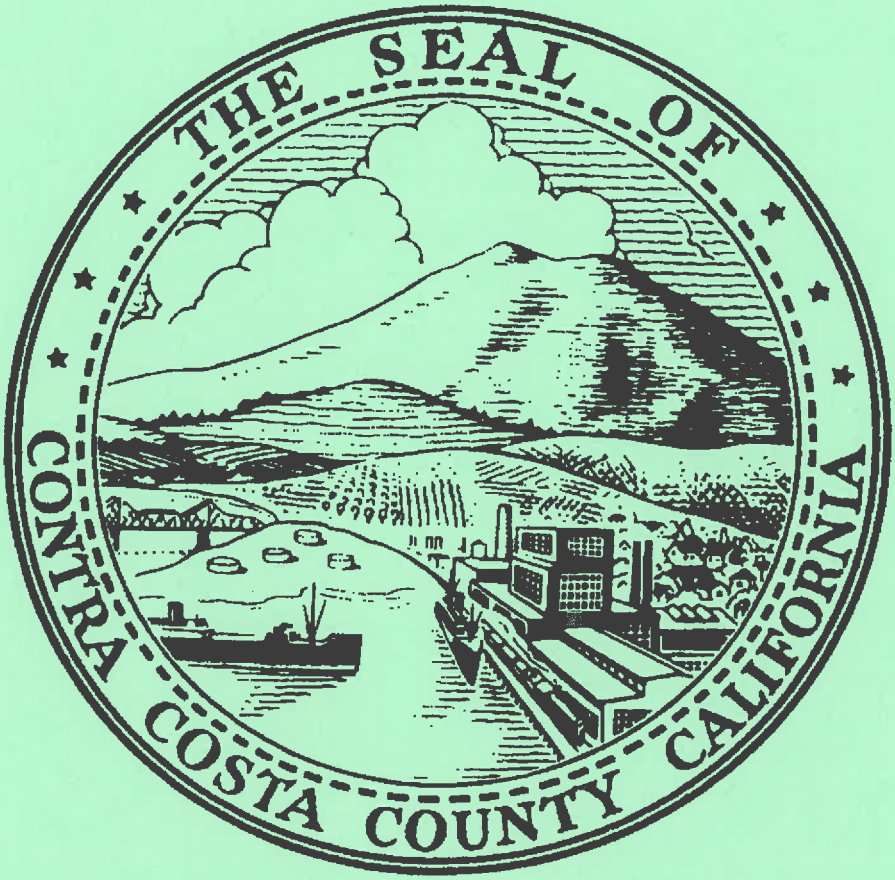

Neighborhood Preservation Program

Job Specifications and Standards

January 2015

CONTENTS

SECTION	TITLE	PAGE
	GENERAL	3
	SCOPE	4
1	DEMOLITION / DEBRIS CONTROL	5
2	SITE WORK / FENCES / DRAINAGE	6
3	CONCRETE	8
4	CARPENTRY	10
5	DOORS - EXTERIOR, INTERIOR & CLOSETS	13
6	CABINETS	16
7	ROOFING	18
8	GUTTERS & DOWNSPOUTS	20
9	WINDOWS & GLAZING	21
10	DRYWALL	24
11	TILE	25
12	EXTERIOR FINISHES	26
13	FLOOR COVERINGS	27
14	INSULATION	28
15	PAINT	29
16	ACOUSTICAL SPRAYED CEILINGS	31
17	HEATING, VENTILATION & AIR CONDITIONING	32
18	PLUMBING - KITCHEN & BATHROOM REHAB	34
19	ELECTRICAL	38
20	LEAD BASED PAINT – *SAFE WORK HABITS*	41
21	STANDARD DRAWINGS INDEX	51

PROGRAM GOALS:

THE PURPOSE OF THE PROGRAM IS TO ELIMINATE CONDITIONS THAT MAY BE DETRIMENTAL TO HEALTH, LIFE, PROPERTY OR PUBLIC WELFARE.

GENERAL & OBJECTIVES:

a. ALL EXISTING STRUCTURES SHALL MEET MINIMUM STANDARDS TO SAFEGUARD LIFE, LIMB, HEALTH, PROPERTY AND PUBLIC WELFARE.

b. REPAIRS AND IMPROVEMENTS CONSIDERED NECESSARY MAY INCLUDE PHYSICAL MODIFICATIONS DESIGNED TO IMPROVE THE ACCESSIBILITY FOR HANDICAPPED OR ELDERLY PERSONS.

c. MATERIALS SELECTED SHALL BE WITHIN REASONABLE PROGRAM FUNDING LIMITS AND BE OF MODERATE QUALITY. WHERE PRACTICAL, ITEMS WILL BE REPLACED WITH THE SAME OR SIMILAR QUALITY AS THE ORIGINAL CONSTRUCTION.

d. THE NEIGHBORHOOD PRESERVATION PROGRAM DOES NOT PROVIDE NEW CONSTRUCTION, EXCEPT TO PROVIDE FOR OR ENLARGE A ROOM OR FINISH AN ATTIC OR BASEMENT IN ORDER TO ALLEVIATE A CONDITION OF OVERCROWDING.

e. TO REMOVE IRREPARABLE SECONDARY BUILDINGS, STRUCTURES, VEHICLES AND OTHER BLIGHTING INFLUENCES LOCATED ON THE PROPERTY; INCLUDING THE REPAIR OR REPLACEMENT OF DILAPIDATED FENCING.

f. TO CORRECT ANY DEFICIENCIES WHICH WOULD MAKE IT IMPOSSIBLE FOR A STRUCTURE TO BE BROUGHT TO AND READILY MAINTAINED AT CODE STANDARDS.

GENERAL

THE FOLLOWING SPECIFICATIONS, TOGETHER WITH THE GENERAL CONDITIONS, DEFICIENCY LIST (WORK WRITE-UP) AND BID AND PROPOSAL FORM THE BASIS OF THIS GENERAL CONTRACT. CONTRACTORS SHALL BASE THEIR ESTIMATES ON WORK TO BE DONE ONLY AS INDICATED ON THE DEFICIENCY LIST, DRAWINGS, AND/OR SPECIFICATIONS. GENERAL AND SUB-CONTRACTORS SHALL ASSUME CERTAIN RELATED RESPONSIBILITIES REGARDING ADJUSTMENTS TO SURROUNDING WORK DURING THE NORMAL PROCESS OF CONSTRUCTING IMPROVEMENTS AND REPAIRS.

ALL MATERIALS SHALL BE NEW AND INSTALLED IN A WORKMANLIKE MANNER. ALL MATERIALS AND INSTALLATION METHODS SHALL BE IN CONFORMITY WITH THE CURRENTLY ADOPTED CALIFORNIA CODES AND LOCAL ORDINANCES.

ALL MATERIALS USED SHALL BE EXACTLY AS THOSE SPECIFIED IN THE DEFICIENCY LIST, ANY CLAIM BY THE CONTRACTOR AS TO THE SUITABILITY, WEIGHT OR METHOD OF INSTALLATION OF MATERIALS SPECIFIED, AS BEING UNSATISFACTORY TO OBTAIN THE INTENDED RESULTS, WILL BE CONSIDERED VOID UNLESS SUCH CLAIMS ARE IN WRITING AND SUBMITTED WITH BID.

ALL MATERIALS SHALL BE INSTALLED PER MANUFACTURER SPECIFICATIONS.

NO SUBSTITUTION OF MATERIALS OR COLORS WILL BE ACCEPTED UNLESS FIRST APPROVED IN WRITING BY THE NEIGHBORHOOD PRESERVATION PROGRAM AND OWNER OF THE DWELLING. IF COLOR AND SELECTIONS ARE NOT SPECIFIED, COLOR AND SELECTION OF MATERIALS SHALL BE SUBMITTED TO THE NEIGHBORHOOD PRESERVATION PROGRAM AND OWNER FOR APPROVAL.

THE SUBMISSION OF AN ESTIMATE SHALL BE EVIDENCE OF THE CONTRACTOR'S HAVING ACQUAINTED HIMSELF WITH THE JOB SITE AND HIS WILLINGNESS TO CONFORM TO ALL CODE AND PROJECT REQUIREMENTS WITHOUT ADDITIONAL COMPENSATION.

WHEN ANY ADDITIONS OR ALTERATIONS VALUED AT MORE THAN $15,000 ARE MADE TO EXISTING BUILDINGS OR MORE THAN $5,000 WHERE FUEL GAS PIPING IS INVOLVED IN THE ALTERATION OR ADDITION, APPROVED SIESMIC GAS SHUT-OFF AND/OR APPROVED EXCESS FLOW GAS SHUT-OFF DEVICES SHALL BE INSTALLED AS PER CCC ORDINANCE 718-8.208

SECTION NO. 1 SHALL APPLY TO ALL ITEMS ON THE DEFICIENCY LIST.

SCOPE

THE CONTRACT PROVIDES FOR THE FURNISHING OF ALL LABOR AND MATERIALS, EQUIPMENT AND THE PERFORMANCE OF ALL WORK AS NOTED ON DRAWINGS AND/OR SPECIFICATIONS HEREINAFTER SPECIFIED. CONTRACTOR SHALL MAINTAIN A COMPETENT FOREMAN ON THE JOB DURING CRITICAL STAGES OF ALL CONSTRUCTION; CONSULT WITH OTHER TRADES AS TO OPENINGS, SLOTS, FURRING REQUIREMENTS, AND CLEARANCES, POST THE DRAWINGS AND SPECIFICATIONS ON PREMISES FOR REFERENCE BY OWNER AND OTHER CONTRACTORS.

ALL PERMITS AND FEES SHALL BE THE CONTRACTORS RESPONSIBILITY TO OBTAIN AS PART OF THE CONTRACT.

ALL REPAIR WORK TO BE DONE ACCORDING TO THE CONTRACT AGREEMENT. VERBAL CHANGES WILL NOT BE PERMITTED. ANY CHANGE TO THE CONTRACT SHALL BE IN WRITING AND APPROVED BY THE OWNER AND THE NEIGHBOR-HOOD PRESERVATION PROGRAM.

ALL REPAIR WORK NECESSARY TO COMPLETE A SATISFACTORY INSTALLATION OF ANY PHASE OF THE JOB SHALL BE INCLUDED AND/OR MADE A PART OF THIS CONTRACT. WHERE ALLOWANCES ARE PROVIDED THE ESTIMATED COST AMOUNT SHALL REPRESENT RETAIL PRICE, TAX AND OTHER RELATED CHARGES. FOR THE ALLOWANCES GIVEN ON APPLIANCES AND FIXTURES, THE HOMEOWNER SHOULD SELECT, THE CONTRACTOR SHALL BE RESPONSIBLE FOR PURCHASE, MAKING ARRANGEMENTS FOR DELIVERY, AND COMPLETE INSTALLATION. THIS SHALL INCLUDING ALL PLUMBING, ELECTRICAL, AND MECHANICAL CONNECTORS TO MEET THE MANUFACTURER'S SPECIFICATIONS AND CURRENT CODES.

A SKILLED CRAFTSMAN AND/OR TRAINEES WITH PROPER SUPERVISION SHALL PERFORM WORK.

IN ORDER TO FACILITATE CONSTRUCTION, THE OWNER AGREES TO RELOCATE ITEMS UNDER 50LBS INCLUDING FURNISHING, DISHES, FOOD STAPLES, WALL HANGINGS ETC., FROM ROOMS, CUPBOARDS AND AREAS WHERE WORK IS TO BE PERFORMED. THE CONTRACTOR SHALL INCLUDE IN THE BID THE COST OF MOVING ALL ITEMS OVER 50 LBS. OWNER SHALL DRAIN WATERBEDS. CONTRACTOR SHALL DISCUSS WITH THE OWNER AT LEAST 48 HRS PRIOR TO A PHASE OF CONSTRUTION, THE COORDINATION AND RESPONSIBILITY OF EACH PARTY.

WHERE MOUNTING HEIGHTS ARE NOT INDICATED, INSTALL INDIVIDUAL COMPONENTS AT STANDARD MOUNTING HEIGHTS RECOGNIZED WITHIN THE INDUSTRY FOR THE PARTICULAR APPLICATION. REFER QUESTIONABLE MOUNTING HEIGHT DECISIONS TO THE OWNER AND THE NEIGHBORHOOD PRESERVATION PROGRAM FOR FINAL DISCUSSION.

UPON COMPLETION OF THE WORK THE CONTRACTOR AND/OR SUB-CONTRACTORS SHALL FURNISH ALL GUARANTEES, INSTRUCTIONS, OWNERS MANUALS, BONDS OR WARRANTIES OF MATERIALS USED TO THE HOMEOWNER.

1. DEMOLITION, CLEARING AND SHORING

STANDARD - ALL EXTERIOR PROPERTY AREAS AND PREMISES SHALL BE MAINTAINED IN A CLEAN, SAFE AND SANITARY CONDITION.

THE ELIMINATION OF BLIGHT AND CONDITIONS WHICH ARE DETRIMENTAL TO HEALTH AND SAFETY.

1.01 The work includes the removal and disposal of existing plumbing fixtures, piping, heating units, ducts, controls, electrical fixtures, wiring, and all other building materials and components required by contract documents to be removed, unless owner requests otherwise. Openings or holes that result from the removal of fixtures, equipment, etc., shall be patched and repaired to match existing floors, walls, ceilings and roofs.

1.02 Demolition of items to be removed or replaced shall be done in a safe, orderly manner without damage to other portions of the property or adjacent properties. Any resulting damage or loss shall be corrected at the expense of the Contractor.

1.03 Debris shall not be allowed to accumulate. All excess debris shall be removed from the site. The premises shall be kept in a clean and orderly condition at all times.

1.04 Remove trees to within 6” and plant materials to within 1” of ground in areas to be cleared. Maintain protection of trees and plant materials that are to remain until completion of work. Contractor shall discuss with owner the likelihood of removal, damage or pruning of plants due to construction.

1.05 All existing streets and sidewalks damaged during the course of the work shall be repaired to the satisfaction of the Agency (i.e. Public Works, Neighborhood Preservation Program) when rehabilitation of building is completed.

1.06 All surplus soil shall be removed from property or spread on the property as owner directs.

1.07 Asbestos Demolition/Renovation Notification Form: On every permit application for demolition or alterations that will involve the removal of friable asbestos, a Bay Area Air Quality Management District Notification Form shall be filled out and submitted to the District.

2. SITE WORK

STANDARD - ANY DEFICIENCIES IN PROPER GRADING OR PAVING ADJACENT TO THE BUILDING SHALL BE CORRECTED TO ASSURE SURFACE DRAINAGE AWAY FROM FOUNDATIONS WALLS, THE PREVENTION OF ACCUMULATED STAGNANT WATER ON THE LOT, AND THE PREVENTION OF SOIL SATURATION DETRIMENTAL TO STRUCTURES AND LOT USE.

2.01 Exterior Foundation Drainage: Excavate around entire dwelling, excavation at the highest point is to be a minimum of 13" deep for 3" pipe. Fill bottom of trench with 2" of ¾" washed gravel. Place a 3" flexible or rigid perforated plastic pipe at a slope of ¼" per foot to outfall or sump pit and cover with 2" of same washed gravel. The contractor shall obtain an inspection and approval of piping before covering. Cover gravel with filter fabric and topsoil. Cut sidewalk and curb and extend pipe to gutter. Pour new concrete to patch sidewalk (see section 3.12). All trenches deeper than the footing of building and paralleling the same must be at least forty-five (45) degrees there from.

2.02 Downspout and Yard Catch System: Install catch basins at low spots. Connect downspouts and catch basins with 3" non-perforated plastic flexible or rigid pipe at a slope of ¼" per foot to outfall or sump pit. Pipe to be a minimum of 6" below grade. The contractor shall obtain an inspection and approval of piping before covering. Fill with fine bedding material and topsoil. Cut sidewalk and curb and extend pipe and pour new concrete. All trenches deeper than the footing of building and paralleling the same must be at least forty-five (45) degrees there from.

2.03 Earthen Swale/Ditch: Soil shall have a 2% minimum slope away from the foundation and side property lines. The swale shall have a 1% minimum slope to an approved drainage area.

2.04 Sump Pump System: A Sump Pump system shall include a minimum ½ H.P. sump pump, pit, discharge piping and an electrical fuse protected system with disconnect at pump. The system shall include a pump of a capacity and head appropriate for sump pump system anticipated use requirements. Sump pump pit size shall be as recommended by the sump pump manufacturer. Pit floor shall provide permanent support for the pump; the pit may be constructed of tile, concrete, plastic or other suitable materials. Pump to discharge into a non-perforated piping system or extend the pipe to an outfall. Pump shall operate on a dedicated circuit no less than 20 amps or amperage required by the pump rating.

2.05 Rock Driveway (Paving): Excavate and grade area to a minimum of 4". Provide for a positive drainage at a slope of ¼" per foot to each side. Install a minimum of 4" of road base rock compacted by a vibratory compactor or other approved method. Install stabilization fabric under road base rock; e.g.; Mirafi 500X or equal.

2.06 Bituminous Drives/Black Top: Excavate and grade area to a minimum of 6" deep. Provide a base of 4" of compacted gravel. Install stabilization fabric under road base rock; e.g.; Mirafi 500X or equal. The surface is to be constructed of bituminous concrete 2" thick. All work shall be done by a Licensed Paving Contractor.

2.07 Wood Retaining Walls: Wood retaining walls shall be a maximum of 3' in height. Materials shall be pressure treated for ground contact and #2 or better Douglas Fir. Posts shall be 4" x 6", spaced a maximum of 4' on center, set in concrete to a depth of 1½ times wall height into undisturbed soil. Postholes shall be 12" in diameter and free of any loose dirt or debris. Retaining boards shall be 2-x material fastened to posts with 16d-galvanized nails. Place a minimum of 6" wide, ¾" drain rock over and around 3" perforated pipe to a height of 6" from finish grade. Install filter fabric between rock and soil. Place a minimum of 6" of soil on top of rock. See standard details, Page 51 - 52.

2.08 Concrete or Block Retaining Walls: Concrete or block retaining walls shall be designed by a Licensed Engineer and approved by Contra Costa County Building Inspection Division.

2.09 Wood Fences: Posts shall be 4" x 4" redwood, cedar or pressure treated. Top and bottom rails shall be construction grade redwood, cedar or pressure treated. Pickets shall be 1" x 6'' x 6' or 1" x 8" x 6' redwood or cedar, solid no loose knots. All nails and/or screws shall be galvanized. Posts shall be set in concrete or post mix (cut side up) in a 30" x 10" pier hole, 3" to 6" of concrete to be poured into the hole prior to setting the post. Posts shall be set at a maximum of 8' on center, into undisturbed soil. All concrete shall be thoroughly mixed. Jetting shall not be an acceptable method of mixing concrete. Gates shall be self-latching with a diagonal wire brace with turn buckle. Inspection required to verify depth of posts and mixing of concrete.

2.10 Cyclone Fences: Fence to be 6' high unless otherwise stated. Post to be equally spaced with a maximum of 10' on center. Posts to be 2" nominal round. Rails to be 1⅜" nominal minimum. Post and rails to be schedule 40. Post hole to be 6" round by 24" minimum deep. Post to be set to within 4" of bottom. All concrete to be hand mixed - jetting shall not be an acceptable method of mixing concrete. Wire gauge to be No. 12 minimum. Wire mesh 2" maximum. Wire to be protected from rusting by coating e.g.; galvanized. Tension wire No. 12 minimum may be used in place of bottom rail. Gates to be self-latching. Tighten the wire (fabric) to provide a smooth uniform appearance free of sag. Fence fabric to be installed 2" above ground. Corner and gate post to be 2⅜" nominal round. Gate frame and rails to be 1⅜" nominal minimum.

2.11 Earthwork: Deposit clean fill and backfill in layers not exceeding 6" under slabs, pavements and other surfacing and 12" under other areas. Compact each layer.

2.12 Excavations for footings shall be in neat and accurately cut trenches to depths and grades shown on drawings. In the absence of drawings, code requirements shall govern.

2.13 Water shall not be permitted to accumulate in excavated or crawl space areas. Drain by positive method to a storm sewer or natural drainage area.

2.14 Backfill shall be brought to a suitable elevation ~~above finished grade~~ to provide for anticipated settlement and shrinkage.

3. CONCRETE

STANDARD - ALL CRACKED, CRUMBLING OR DETERIORATED CONCRETE THAT POSE A THREAT TO THE OCCUPANTS SHALL BE REPLACED OR REPAIRED.

ALL STRUCTURAL SYSTEM COMPONENTS, SHALL BE IN SOUND CONDITION AND CONSIDERED SERVICEABLE FOR THE EXPECTED USEFUL LIFE OF THE REHABILITATED BUILDING. INDIVIDUAL STRUCTURAL MEMBERS WHICH ARE IN A SERIOUSLY DETERIORATED CONDITION SHALL BE REPLACED AND ALL LOOSELY JOINTED STRUCTURAL MEMBERS SHALL BE RESTORED TO THE ORIGINAL RIGIDITY. IN ADDITION, ANY SAGGING FLOORS OR OUT OF PLUMB CHIMNEYS, FIREPLACES, PARTITIONS, STAIRS AND BUILDING EXTERIOR WALLS SHALL BE RESTORED, AS NEAR AS PRACTICAL, TO AN ACCEPTABLE LEVEL OR PLUMB POSITION, OR BRACED SO AS TO PREVENT A REOCCURRENCE OF THESE CONDITIONS.

3.01 All materials shall conform to applicable ASTM standards.

3.02 Concrete materials shall be as follows:

a. Cement: Portland cement, Type II
b. Sand: Clean, sharp, free of impurities and excessive dampness.
c. Coarse aggregate shall be cleaned, washed gravel or sound crushed rock graded from ¼" to ¾" maximum size
d. Water: Free of impurities
e. Reinforcing Steel: ASTM 15-58 and A305-64
f. "Ready-Mix" concrete may be used

3.03 The minimum compressive strength of concrete at 28 days shall govern its usage.

a. 2500 psi: All flat work such as sidewalks, driveways, supported stairs and slabs on grade and rat proofing.
b. 2500 psi: All footings, piers, foundation and retaining walls.

3.04 Slump: Structural concrete not to exceed 4"; slabs, 2½".

3.05 Concrete shall contain not less than 5 sacks of cement per cubic yard. The water shall be clean, taken from a source suitable for domestic consumption and shall not exceed five and one half gallons per sack of cement, including the free water contained in the aggregate.

3.06 Steel Reinforcement shall be clean, accurately bent, properly spaced and securely supported.

3.07 Install all inserts, etc., required for the installation of other work.

3.08 Concrete shall be placed in well-braced forms per details shown on drawings and when the concrete cures, remove the forms. All work beneath slabs by other trades shall be placed prior to placing concrete. All plumbing, conduit, backing, sleepers, anchors, etc., shall be accurately set and wrapped.

3.09 Reinforcement. Reinforce all floor slabs, patio slabs, driveways and walkways with a minimum # 3 rebar at 16" centers each way or #4 rebar at 18" centers each way.

3.10 Exterior concrete flatwork and garage floors shall be pitched for drainage at least 1" in 10 feet. Concrete shall be a nominal 4" or more in thickness. Concrete shall be scored and contain expansion joints to control cracking. Expansion joints shall be provided at contacts with existing concrete and/or masonry. Scored control joint shall match existing adjacent patterns with a maximum spacing of 5 feet for sidewalks and 10 feet at other areas. All surfaces shall be steel troweled and exterior exposed areas shall be completed with a fine broom.

3.11 Interior floor slabs shall be steel trowel finished. Floors shall have 4" compacted bedrock base course and 1" clean sand cushion over an unruptured, continuous waterproof minimum 6 mil. membrane.

3.12 Curbs, driveway cuts and sidewalks. The contractor shall obtain from Public Works or other authority the required permits, inspections and final for work done in the Public Right of Way.

3.13 Rat-proofing shall be a minimum of 2" thick.

3.14ld and new foundations shall be connected per engineer's directions. New foundation shall match existing. All footings shall extend into solid, undisturbed soil. See Section 2.12.

3.15 Ufer ground (concrete encased electrode): A 20' length of either ½" diameter reinforcing steel or #4 bare copper conductor shall be encased with a minimum 2" thickness of concrete and the conductor positioned within the bottom 3" of a concrete footing or foundation in direct contact with earth.

3.16 Curing: Concrete shall be maintained above 50 degrees F and in a moist condition for at least the first seven days after placing.

3.17 Flash/Curb Wall: Remove damaged wood and install new wood. Install 26 gauge galvanized metal. Install #3 minimum rebar dowels at 36” o.c. and two #3 continuous bars. Concrete to be a minimum of 6” wide with a slope. Concrete to extend a minimum of 6” above finish grade.

3.18 All concrete cuts shall be a minimum 1” deep. Grind cut edges, either round or beveled, to match existing weakened control joints.

4. CARPENTRY

STANDARD - ALL MATERIALS SHALL BE NEW AND INSTALLED IN A WORKMANLIKE MANNER AND IN CONFORMITY WITH THE CURRENT ADOPTED CODES.

ALL STRUCTURAL SYSTEM COMPONENTS, SHALL BE IN SOUND CONDITION AND CONSIDERED SERVICEABLE FOR THE EXPECTED USEFUL LIFE OF THE REHABILITATED BUILDING. INDIVIDUAL STRUCTURAL MEMBERS THAT ARE IN A SERIOUSLY DETERIORATED CONDITION SHALL BE REPLACED AND ALL LOOSELY JOINTED STRUCTURAL MEMBERS SHALL BE RESTORED TO THE ORIGINAL RIGIDITY. IN ADDITION, ANY SAGGING FLOORS, PARTITIONS STAIRS AND BUILDING EXTERIOR WALLS SHALL BE RESTORED, AS NEAR AS PRACTICAL, TO AN ACCEPTABLE LEVEL OR PLUMB POSITION, OR BRACED SO AS TO PREVENT A REOCCURRENCE OF THESE CONDITIONS.

4.01 All connections shall be accurately fitted and solidly nailed, spiked, screwed or bolted together to produce stout, rigid joints. Special attention is directed that all framing shall be true, level, plumb and in a straight plane to receive other materials. Hammer or tool marks or marred surfaces and edges will not be acceptable on any exposed finished surfaces and, as evidence of inferior workmanship, shall be cause for rejection of such work and will be replaced at no extra cost to homeowner. Install members in as long lengths as practical.

4.02 Nails, bolts, and other details shall be placed without splitting the wood. Wherever the required nailing tends to split the wood, holes for nails shall be drilled. Secure all interior finish with finishing nails or screws. Counterset all nails or screws. Jambs to be considered as finished wood.

4.03 Perform all necessary subsequent patching to provide complete, structurally sound construction. All wall-mounted items shall be securely fastened to solid backing or blocking.

4.04 Framing: Horizontal-framing members shall be No.2 or better. Other framing lumber shall be construction grade or better. Moisture content shall not exceed 19% at time of installation.

4.05 All wood within 8” of the finished grade shall be factory pressure treated.

4.06 Minimum thickness of sill plates shall be 2” nominal. Sill plates shall be anchored with bolts embedded 7” into concrete. Minimum anchor bolts to be ⅝” x 10” A.B. at 4' o.c. with 1 anchor bolt no more than 12” or less than 7 bolt diameters from each end, minimum 2 bolts per sill.

4.07 Unless otherwise shown on drawings, all structural lumber shall be anchored, if required, with appropriately sized galvanized metal hangers, ties, angles, straps or tie-downs, whichever is applicable. Use connectors by “Simpson”, or approved equal.

4.08 Minimum bearing for joists framing into masonry shall be 3”. Joists framing into masonry shall be pressure treated or shall be construction grade redwood, foundation grade. Joists, beams and rafters shall be laid crown up and shall be blocked solid at ends and over all bearings.

4.09 Minimum size of studs in walls and partitions shall be 2x4” at 16” O.C. Studs shall be cut square and of uniform length. Double studs at all openings.

4.10 Top plates shall be double 2 x 4's. Plates shall be lapped at corners and lapped or anchored to principal intersecting partitions. Splices in lower member of top plate shall occur over studs, and in upper member at least 4 feet away from splice in lower member (or install a metal strap 12” long).

4.11 Where plumbing, heating or wiring is placed in or partly in a partition, necessitating the cutting of the soles, plates or studs, a metal tie not less than ⅛” thick and 1½” wide shall be fastened to the plates across and to each side of the opening with not less than four 16d nails. Stud shoe may be used instead of metal tie. (“Simpson” SS or equal) on studs.

4.12 Fur framing as required to conceal pipes, conduits, ducts, etc.

4.13 Roof sheathing shall be a minimum of ½” CDX plywood or O.S.B., and ½” CCX plugged and sanded plywood at exposed areas. Use H-clips or blocking on all perpendicular edges over 24” o.c.

Subfloor and Underlayment

4.14 Plywood, composite board, waferboard, oriented strand board and particleboard may be used where they comply with the California Building Code Standards - approval and installed per manufacturer's recommendation.

4.15 Plywood subflooring shall be grade CDX or better; minimum thickness shall be ¾" nominal where joists are spaced at 16" O.C. and ends shall be completely supported. Subflooring shall be glued and nailed with ring-shank nails.

4.16 Minimum thickness for subfloor boards supporting wood strip flooring shall be ¾"; minimum width shall be 6".

4.17 Underlayment board shall meet the following requirements: ⅜" particle board-or equal. Underlayment material shall be stapled or ring shank nailed every 4" in every direction. Any void or depression in floor shall first be filled with a latex filler compound to insure smooth, sound finish floor. Remove shoe and run underlayment up to base. Replace with new pre-finished shoe or rubber base, as specified.

4.18 Provide at least ½" clearance between subflooring and masonry or concrete walls.

STAIRS

STANDARD - ALL STAIRS SHALL PROVIDE FOR THE SAFETY OF ASCENT AND DESCENT. REPLACEMENT OF ALL TREADS AND RISERS THAT ARE BROKEN OR THAT EVIDENCE EXCESSIVE WEAR SHALL BE MADE AND ALL STAIRS SHALL BE EQUIPPED WITH HANDRAILS.

4.19 Stairways shall have a minimum width of 36" and a minimum continuous headroom of six feet, eight inches (6'-8"). Step rise shall be from 4" to 7¾" with a minimum 10" tread run with a ¾" to 1¼" nosing; dimension of rise or run in any flight of stair shall have maximum variance of ⅜" with fire blocking at tread line. Exterior stairs to have a ¼" slope to nosing. All members shall be capable of withstanding all designed loads.

4.20 Finish Interior Stairways: Wood stairs shall be of kiln-dried vertical grain hardwood, stained and finished; other finished lumber shall be kiln-dried free from tool marks and defects and shall be of a species suitable for its intended use.

4.21 Guardrails and Handrails: Guardrails or handrails shall be constructed on the open sides of decks, porches and stairs elevated more than 30" above adjacent grade. Guardrails shall be 42" high and handrails shall be 34 to 38" above the tread nosing; both shall have intermediate rails to limit openings to 4" between them and 6" between the stairs and railing assembly. Handrails shall be of approved cross section width 1¼-2" and shall also be required on stairs of 4 risers or more. See Standard Drawings, Page 61-62 and specific sections of the California Building Code.

Porches and Decks

STANDARD - ALL EXTERIOR PORCHES, DECKS, BALCONIES, ETC. SHALL BE SAFE AND CAPABLE OF SUPPORTING ANTICIPATED LOADS.

4.22 Repairs of existing porches and decks shall match the existing materials and design, unless otherwise noted. New or replacement structures shall be built per construction drawings or standard details and shall meet design requirements of the California Building Code. Wood within 8" of earth or in direct contact with concrete shall be pressure treated construction grade #2 redwood, decay resistant or other approved materials. Redwood decking shall be 2 x 6 Deck Heart or better with spacing gap of ⅛" at time of installation. Other approved decking materials (Trex, Timbertech) shall be installed as per manufacturer's specifications. Where plywood decking is exposed to the weather, it shall be a minimum CCX grade (Marine or Pressure Treated) sloped ⅛" per foot for drainage. All fasteners shall be hot dipped galvanized or equal.

4.23 Underfloor access areas shall be ventilated by openings in exterior foundation walls. Such openings shall have a net area of not less than 1 square foot for each 150 square feet of underfloor area. Openings shall be located as close to corners as practical and shall provide cross ventilation. The required area of such openings shall be approximately equal distributed along the length of at least two opposite sides. They shall be covered with corrosion-resistant wire mesh with mesh openings of ¼" in dimension. Patch or repair exterior wall surface to match as required.

5. Doors: Sections 5.14 through 5.18 shall apply to all doors.

STANDARD - ALL DOORS, INCLUDING THEIR HARDWARE, SHALL OPERATE SATISFACTORILY AND GIVE EVIDENCE OF CONTINUING ACCEPTABLE SERVICE. DEFECTIVE GLASS SHALL BE REPLACED. IN ADDITION, ALL REPLACED EXTERIOR DOORS SHALL BE SOLID CORE. HARDWARE SHALL HAVE A SATIN BRASS FINISH OR AN APPROVED FINISH BY THE HOMEOWNER.

ALL DOORS SHALL HAVE LOCKS THAT ARE IN GOOD REPAIR AND CAPABLE OF TIGHTLY SECURING THE DOOR. HOWEVER, ALL LOCKS IN THE REQUIRED MEANS OF EGRESS SHALL BE READILY OPENABLE FROM THE INSIDE WITHOUT THE USE OF KEYS.

ALL EXTERIOR DOORS SHALL BE WEATHERSTRIPPED SO THAT THERE IS NO SIGNIFICANT ENTRY OF AIR OR WATER INTO THE STRUCTURE.

5.01 Wood Front Entry Door shall be 1¾" prehung solid core, slab style, stain grade birch. Jambs and casing shall be stain grade. Installation to include M-D Jamb-up door weather-stripping (or equal), threshold, door bottom, peephole, three butt hinges, entry lock and separate single cylinder dead bolt with 1" throw keyed alike. Paint or stain per owner's choice.

5.02 Metal or Fiberglass front entry door shall be Reliabilt, Masonite, Feather River (or equal), prehung door. Include all additional trim, lockset, deadbolt, peep hole for a complete installation. Door unit to have integral weather-stripping and threshold. Paint per owner's choice.

5.03 Garage to living area door shall be 1⅜" prehung solid core, slab style, self-closing, and meet 20 minute fire rating requirements. Jambs and casings shall be stain grade. Installation to include M-D Jamb-up door weather-stripping (or equal), threshold, door bottom, three butt hinges, entry lock and separate single cylinder deal bolt with 1" throw keyed alike with front door. Paint or stain per owner's choice.

5.04 Metal garage door to living area shall be self-closing, steel clad door and jamb set by T.M. Cobb, Thermatru, or equal (unless otherwise specified in contract) and meet 20 minute fire rating requirements. Installation to include weather-stripping, threshold, separate single cylinder dead bolt with 1" throw and entry lock keyed a like with front door. Paint per owner's choice.

5.05 Garage to exterior shall be 1⅜" prehung solid core slab style stain grade birch jambs and casings shall be stain grade (unless otherwise specified in contract). Installation to include M-D Jamb-up door weather-stripping (or equal), threshold, door bottom, three butt hinges, entry lock and separate single cylinder dead bolt keyed alike with front door. Paint or stain per owner's choice.

5.06 Metal exterior door shall be a, Reliabilt, Masonite (or equal), prehung flush door (unless otherwise specified in contract). Include all additional trim, lockset, and deadbolt for a complete installation. Door unit has integral weather-stripping and threshold. Key alike with front door. Paint per owner's choice.

5.07 Metal exterior door with openable window shall be Reliabilt, Masonite or equal, prehung flush door (unless otherwise specified in contract). Include all additional trim,

lockset, and deadbolt for a complete installation. Door unit has integral weather-stripping and threshold. Key alike with front door. Paint per owner's choice.

5.08 House to exterior door (non Exit Discharge) shall be 1⅜" prehung solid core slab style stain grade birch; jambs and casings shall be stain grade (unless otherwise specified in contract). Installation to include M-D Jamb-up door weather-stripping (or equal), threshold, door bottom, three butt hinges, entry lock and separate single cylinder dead bolt keyed alike with front door. Paint or stain per owner's choice.

5.09 House to unconditioned area shall be 1⅜" hollow core slab style stain grade birch; jambs and casings shall be stain grade (unless otherwise specified in contract). Include M-D Jamb-up door weather-stripping (or equal). Install passage lock. Paint or stain per owner's choice.

5.10 Wood or metal secondary entry door shall be 1⅜" pre hung standard quality masonite plywood panel door with fixed tempered safety glass pane, jambs and casing shall be paint grade (unless otherwise specified in contract). Installation to include M-D Jamb-up door weather-stripping (or equal), threshold, door bottom, three butt hinges, entry lock and separate single cylinder dead bolt keyed alike with front door. Paint or stain per owner's choice.

5.11 Wood or metal secondary through air entry door shall be 1⅜" solid core slab style, stain grade birch with openable window, jambs and casing shall be stain grade (unless otherwise specified in contract). Installation to include M-D Jamb-up door weather-stripping (or equal), threshold, door bottom, three butt hinges, entry lock and separate single cylinder deadbolt keyed alike with front door. Paint or stain per owner's choice.

5.12 Interior doors shall be 1⅜" prehung stain grade slab style hollow core birch, jambs and casings shall be paint grade (unless otherwise specified in contract). Doors to bathrooms, toilet compartment and master bedroom shall have privacy locks. All other interior doors shall have passage door sets. Paint or stain per owner's choice.

5.13 Interior Panel Door shall be 1⅜" pre hung 6-panel hard board hollow core door, jambs and casing shall be paint grade (unless otherwise specified in contract). Doors to bathrooms, toilet compartments and master bedroom shall have privacy locks. All other interior doors shall have passage locks. Paint per owner's choice.

5.14 Door Hardware: All exterior doors having their hinges exposed to the exterior shall have security pin on center butt hinge.

5.15 Door Trim: Re-using existing trim if undamaged-contractor to practice due diligence to not damage trim. New trim to match existing style and be painted or stained per owner's choice. Existing used trim shall be touched-up to give a finished look. See Section 6.07, 6.08 and 15.08.

5.16 Mail slots in doors shall comply with U.S. Postal regulations.

5.17 Rough and finish hardware shall match as close as possible to existing companion hardware. Where all hardware is new, use Schlage, Kwikset or equal. Keyed locks and dead bolts shall be keyed alike and/or keyed to existing.

5.18 Door Stops: Provide door bumper stops for all doors where hardware or door will strike a finished wall or fixed equipment.

5.19 Overhead Vehicle Garage Doors: Replacement of garage doors shall be complete with new springs and hinges approved by a recognized testing lab. Sectional roll and lift up garage door or barn style may be used. Include all hardware necessary for easy and safe operation. Paint per owner's choice. Include all necessary woodwork or alterations. Damaged or deteriorated jambs or trim shall be replaced. All repaired or replaced jambs or trim shall be painted to match existing. Gaps at door edges shall not exceed ½". Install vinyl seal on door bottom. All wood doors shall be primed and painted on all 6 sides per Section 15.

5.20 Garage Door Opener: Install a Stanley Professional Series garage door opener or equal. Install unit per manufacturer's instruction. Installation to include all wiring, including a 120-volt receptacle. Provide owner with a minimum of one remote control and one push button opener. Door to have infrared safety reversing sensors to prevent door from closing when anything enters its path.

5.21 Security Screen Door: Install per manufacturer's specifications. Entry lock and dead bolt to be keyed alike with front door. Owner to have choice of color and style.

5.22 Sliding Glass Door: Shall be Energy Star rated. Install door frame level, plumb and square. Install per manufacturer's instructions. All exterior doors shall provide a weatherproof barrier. Doors shall operate smoothly.

6. CABINETS

STANDARD - CABINETS SHALL BE MAINTAINED IN GOOD REPAIR, BE STRUCTURALLY SOUND, AND BE IN SANITARY CONDITION SO AS NOT TO POSE A THREAT TO THE HEALTH, SAFETY AND WELFARE OF THE OCCUPANTS.

6.01 Construction and installation of wood and metal cabinets shall be in accordance with acceptable standards. Cabinets shall be erected straight, level and plumb and securely anchored in place. Scribe and closely fit cabinets to adjacent work. Provide necessary grounds and anchors for securing trim and cabinet work in place. Install trim molding where walls or ceiling is out of level or plumb. Exposed ends of cabinets to receive a finish end panel. Installation to include fillers where needed.

6.02 Minimum gauge of steel for metal cabinets and grade of wood for wood cabinetwork shall be suitable for its intended use.

6.03 Cabinets shall be American Woodmark, Crown or other Neighborhood Preservation Program approved units. Unless specified in Deficiency List, the door style shall be recessed panel, e.g., Crown Regent, Woodmark Ashland.

6.04 The contractor shall provide a cabinet layout showing size and types of cabinets prior to ordering cabinets.

6.05 Cabinet Refacing: See Sections 6.10 – 6.17.

6.06 Refinishing Wood Cabinets: See Section 15.11.

TRIM

6.07 Finish lumber shall be dressed free of tool marks and other defects. Grade shall be suitable to its intended use.

6.08 New trim or molding adjoining other work or replacing old work shall match old work in size and profile or otherwise be reasonably appropriate upon finished installation. Refinishing wood cabinets, see section 15.11.

6.09 Interior trim, (crown, casing, baseboard) shall be MDF, primed finger-jointed pine, stain grade or equivalent. MDF shall not be used in bathrooms.

CABINET REFACING

6.10 All doors, drawers, and hardware on existing cabinetry to be removed and disposed of off site. The homeowner may elect to retain possession of the cabinets and hardware.

6.11 All interiors of cabinets to be painted with Kelly-Moore semi-gloss or equivalent, unless stated otherwise in contract. All cabinet shelf bottoms and fixed shelves to be sealed with Minwax Polycrylic semi-gloss protective finish or equivalent. If significant damage is present to the shelving or cabinet base, they shall be replaced in similar material composition.

6.12 Apply new 3/16” MDF core solid wood veneered end panels at all cabinet ends, apply with 3M or equivalent spray adhesive and brad nails. Apply new 10 mil. Veneer solid wood skins over contact cement prepared face frames. All County bids will be OAK unless otherwise stated in contract. Install toe kicks to match new reface materials. All finish on reface wood materials to be “Conversion Varnish” or equivalent. All cabinets above 58” to have the under bottoms of the cabinets to be covered with the same 3/16” end panel material to properly finish off the under bottoms of cabinet. Any cabinet below 58” are to have the under bottoms to be painted as interiors.

6.13 Install new 2⅜” crown molding to cabinet uppers. If there is no room for crown, then use decorative scribe moldings in place of crown. Install new ⅞” x ¼” decorative scribe moldings to finish any end panels, or where needed to finish project correctly. All corbels to be replaced using solid hardwood materials.

6.14 Purchase and install all new custom sized cabinet doors made with premium hardwood, with outside frame measurements of full 2⅜" and approximately ⅞" thick. All door hinges to be 120 degrees fully adjustable cabinet maker grade quick detach or equivalent. Purchase and install all new melamine drawer bases on 100 pound rated heavy duty slides mounted on solid wood. Purchase and install all new custom sized cabinet drawer fronts made with premium hardwood approximately ⅞" thick. Standard drawer design is finger pull style unless knobs or pulls are requested in contract. All hardwood to be from sustainable forests in the United States.

6.15 All doors, drawers and shelves to be properly adjusted prior to completion. All doors and drawers to have felt or rubber bumpers installed.

6.16 All cabinet face frame veneer skins to be given a ten (10) year or better warranty on delamination. Warranty based on customers giving reasonable treatment to skins. Reasonable treatment requires materials to: *Not be subject to abnormal heat, cold, dryness, moisture or humidity. *Not be subject to impairment of structural strength when fitting or applying hardware. *Not be subject to cleaning chemicals that can damage them. *Not be subject to physical damage. *Any material claimed to be defective must be made available for inspection by installer.

7. ROOFING Sections 7.01 through 7.06 shall apply to all roofs.

STANDARD - ALL ROOFS SHALL HAVE A WATER-TIGHT AND REASONABLY DURABLE COVERING FREE OF HOLES, CRACKS, EXCESSIVELY WORN SURFACES OR OTHER DEFECTS THAT INDICATE A POTENTIAL FOR THE INFILTRATION OF RAIN OR EXCESSIVE MOISTURE INTO THE STRUCTURE.

ALL EXISTING ROOFING SHALL BE REMOVED.
ALL BUILT UP ROOFS SHALL BE INSULATED.
All FLAT TOP ROOFS SHALL DRAIN PROPERLY.

ALL STRUCTURAL SYSTEM COMPONENTS, SHALL BE IN SOUND CONDITION AND CONSIDERED SERVICEABLE FOR THE EXPECTED USEFUL LIFE OF THE REHABILITATED BUILDING. INDIVIDUAL STRUCTURAL MEMBERS WHICH ARE IN A SERIOUSLY DETERIORATED CONDITION SHALL BE REPLACED AND ALL LOOSELY JOINTED STRUCTURAL MEMBERS SHALL BE RESTORED TO THE ORIGINAL RIGIDITY. IN ADDITION, ANY SAGGING ROOFS SHALL BE RESTORED, AS NEAR AS PRACTICAL, TO AN ACCEPTABLE LEVEL OR PLUMB POSITION, OR BRACED SO AS TO PREVENT A REOCCURRENCE OF THESE CONDITIONS.

7.01 The contractor shall obtain an inspection on the prepared roof deck, in addition to all other inspections required by the Building Inspection Division. Roofing installation shall be per manufacturer specifications, and the California Building Code, Chapter 15.

7.02 Roofing contract shall include the installation of all new outlets, flashing and counter flashing, roof jacks, metal drip edges, caps, leaf guards, scuppers, nosing and gravel stops required for a satisfactory roof installation. Neoprene rubber gasket roof jacks required on ABS vents. Tape or mastic on ABS vents is not acceptable substitutes for approved gasket seals. Seal storm collars on metal vents. Maintain required clearances as per manufacturer's specifications or as in the California Mechanical Code. Metal drip edge may be eliminated on the eave where flanged gutters are installed. Prime and paint with a suitable color to blend in with the roofing.

7.03 Replace all damaged or deteriorated sheathing, decking, rafter tails, barge rafters, soffit, cornice, fascia board and trim. (For roof sheathing specs. refer to section 4.13.) Obtain inspection approval before covering sheathing and/or deck. Prime and Paint and/or stain new, exposed wood to match existing color(s).

7.04 Nails or other fasteners shall not penetrate through eave or overhang sheathing so as to be exposed and or visible from underside. Should any nails or other fasteners be exposed or seen from underside, the contractor shall cut them off flush, caulk or putty as necessary and paint to match.

7.05 Prior to commencement of project, Contractor shall discuss with the owner the likelihood of infiltration of dust and debris from the removal of the roof. Contractor shall protect with plastic in the garage the owner's property and shall leave the area free of debris.

7.06 Antenna: Remove existing to install roofing. Re-install or leave off per owner choice.

7.07 Built up tar and gravel: a licensed C-39 contractor shall perform Roofing application. Roof to meet Class "C" minimum. Contractor to provide manufacturer's specifications showing requirements and installation instructions. Remove existing roof coverings to expose roof sheathing and prepare roof deck for inspection. Secure fiberglass base sheet using approved cap nails and apply two fiberglass plies for a minimum three-ply coverage. Flood the surface with asphalt and, while hot, embed the appropriate gravel. Back mop and apply a mineral surface cap sheet on inclined surfaces without gravel. Cant strips shall be used at all vertical (90 degree) projections from deck. See Standard Drawings, pages 63 - 64.

7.08 Built-Up Tar and Gravel with Insulation: Built up roofs shall be insulated over living areas where there is no attic or where there is insignificant space to insulate attic area. Remove existing roof coverings to expose sheathing and prepare roof deck for inspection. Cover the entire roof deck with a dry sheathing paper. Install roof insulation with aged R-Value of at least R-30 over conditioned areas (submit data sheet). Stagger insulation end joints and secure with approved cap nails. Mop ½" roofing fiberboard over the insulation offsetting the side and end joints from the insulation below. Cap fascia boards as needed:

Insulation not extended to the fascia shall use a transition of cant strips or taper edge boards. Complete the three-ply roof per Section 7.07 and 7.08 - See Standard Drawings, pages 63 - 64.

7.09 Dibiten, GAF flint coat, or approved equal, torch-down roof coverings with insulation: Remove existing roof coverings to expose sheathing and prepare roof deck for inspection. Install rigid insulation and modified bitumen roofing membranes as per “manufacturer’s specification and application manual” to achieve a minimum 20-year warranty. Use a granular surfaced modified bitumen membrane as the top sheet. Homeowner to choose color of granular top sheet.

7.10 Composition Shingles: Remove existing roof covering to expose sheathing and prepare roof deck for inspection. Install new 40-year or longer dimensional fiberglass shingles (Owner to choose color) per manufacturer's specifications and the California Building Code. Shingles laid with double coverage may be installed on slopes as low as 2” in 12” with an underlayment consisting of two layers of type 15 felt applied shingle fashion. Where starter strips are used, seal first course with a dab of roof cement.

7.11 Where composition shingles are to be installed on a building with skip sheathing, ½” CDX or OSB plywood shall be installed over existing sheathing or the spaces may be filled in solid with additional sheathing of equal thickness. Exposed plywood ends shall be protected with metal edging. Install shingles per manufacturer’s specifications and the California Building Code. The requirements of attic ventilation shall meet minimum state building codes.

7.12 Attic Ventilation: The net free ventilation area shall be not less than 1/150 of the area of the space ventilated, with 50% of the required ventilating area, provided by ventilators located in the upper portion of the space to be ventilated at least 3’ above eave or cornice vents with the balance of the required ventilation provided by eave or cornice vents. The minimum net free ventilation area shall be 1/300 of the area of the space ventilated, provided a vapor retardant having a transmission rate not exceeding 1 perm is installed on the warm side of the attic insulation and provided 50% of the required ventilating area is provided by ventilators located in the upper portion of the space to be ventilated at least 3 feet above eave or cornice vents, with the balance of the required ventilation provided by eave or cornice vents. The openings shall be covered with corrosion-resistant metal mesh with mesh openings of ¼” in dimension.

8. GUTTERS AND DOWNSPOUTS

STANDARD - ALL DETERIORATED GUTTERS, DOWNSPOUTS, SOFFITS, FASCIA OR OTHER ELEMENTS THAT MAY ALLOW THE SIGNIFICANT ENTRY OF WATER OR AIR INTO THE STRUCTURE SHALL BE REPLACED OR REMOVED.

8.01 Metal Gutters: ~~OGEE~~ Gutters to be 26 gauge galvanized with or without wing. Style K fascia and rib face gutters to be 26 gauge galvanized with or without wing. Half round gutters to be 26 gauge galvanized. Install 2” x 2” galvanized metal flashing where gutters are installed without wings.

8.02 Seamless aluminum gutters with baked on enamel finish. Owner to choose color and pattern. When standard colors do not match house colors, contractor shall prepare and paint to match.

8.03 Remove existing guttering and downspouts. Guttering shall be installed with a slight pitch or level to the downspouts. Hangers to be straphangers or spikes with spacers designed for the purpose. Hangers to be the same materials as gutters except for wood. Spacing of hangers shall be 48” on center for galvanized metal and 30” on center for aluminum. Joints shall be soldered or provided with suitable watertight slip joints. Guttering shall be tested to hold water. Prime and paint guttering per owner's choice of colors.

8.04 Downspouts shall be square, rectangular or round and of the same material as guttering. Downspouts shall be fastened at top, bottom and as needed to keep straight alignment. Downspouts shall be angled at bottom away from structure and into a splash block, concrete or tied into drainage system. Where splash block(s) are missing, the contractor shall install new. Downspouts shall be sized at 100 square feet of roof area per 1 square inch of downspout. Prime and paint downspouts per owner's choice of colors.

8.05 Gutter screens shall be installed where trees overhang or are within 3 feet to the house to prevent the accumulation of leaves and debris in the gutter.

9. WINDOWS AND GLAZING

STANDARD - ALL WINDOWS, INCLUDING THEIR HARDWARE, SHALL OPERATE SATISFACTORILY AND GIVE EVIDENCE OF CONTINUING ACCEPTABLE SERVICE. DEFECTIVE GLASS OR LOCKING MECHANISMS SHALL BE REPLACED OR CORRECTED.

ALL WINDOWS SHALL HAVE INSECT SCREENS IN SUITABLE CONDITION TO SERVE THEIR INTENDED PURPOSE.

9.01 General Window Requirements: Windows shall be Energy Star rated and meet the minimum California Energy Code requirements. Manufacturer shall recommend thickness for the specific use. Installation of windows shall comply with recommendations of the manufacturers. Set all frames level, plumb and true. Hardware shall be installed with a suitable means of locking (camlock and keeper). All windows shall operate smoothly without bending. Flash and caulk to insure watertightness. New windows shall have a screen for each vent opening. Safety glazing shall be used in locations required by the

California Building Code and within 2' from doors, less than 60” above tub/shower drain, within 18” of a walking surface, within 60” of stair landing and/or subject to human impact.

9.02 Screens: Contractor shall replace or repair all screens as specified in the work write-up. Screens shall be mounted in a removable aluminum frame. Screens shall not be patched: a minimum repair is replacing the screen in an existing frame. If wood frame is replaced, the wood shall be primed and painted to match existing.

9.03 Sashes: When new sashes are installed into existing frame, the contractor shall check all window-parting stops. The contractor shall replace stops that are broken or rotten or impair proper window operation. Sash Cords (Ropes) or sash balancers: Sash cords shall be replaced if frayed or broken. Remove existing and install new sash cord to weights. Cord lengths shall be equal in length. Weights and window shall operate smoothly. Pockets shall be secured. Install new parting stops if needed. Cut paint with razor blade to keep paint from spalling. Where weights are missing, weight pockets are not cut in or sash balancers are used and/or with owner's approval sash balancers may be installed.

9.04 Aluminum or Vinyl Inserts/Steel Casement: Remove stiles, mullions, sash and glass from steel frame. Window shall be caulked to stops and screwed into frame. Nail an oil base prime coated ¾” quarter round molding on inside to hide steel frame. Paint wood to match interior color. Insert shall cover exterior frame or add an aluminum strip to give full coverage. Approved window manufacturers are International, BetterBilt, Milgard, Jeld Wen or an approved equivalent.

9.05 Aluminum or Vinyl Inserts/Wood Window Frame: Wood stops shall be oil base primed on all four sides and finish painted on exposed surfaces. Window shall be caulked to stops and screwed into frame. Re-nail inside stops, care to be taken as to not damage inside stop or do unnecessary chipping. Set all finish nails. Approved window manufacturers are International, BetterBilt, Milgard, Jeld Wen or an approved equivalent.

9.06 Nail On: NOTE: Section 9.08 shall apply to new windows.

Stucco building: Break stucco, remove window; install new window as per manufacturer specifications. Flash window and patch exterior per stucco section and interior per drywall section (Note: Must be inspected prior to covering).

Wood building: Remove trim, remove existing window. Install window as per manufacturer’s specifications, flash window and install new trim to match existing. Approved aluminum window manufacturers are International, Milgard, Jeld Wen or an approved equivalent.

9.07 Bedroom Windows: One window in each bedroom shall meet present California Building Code requirements for emergency egress, unless met by other means. Include in price any structural changes and patching inside and out. Walls to be ready for paint. All escape or rescue widows for sleeping rooms shall have a minimum net clear opening of 5.7 square feet (5 square feet for grade floor openings). The minimum net clear opening height dimension shall be 24”. The minimum net clear opening width dimension shall be

20”. Where windows are provided as a means of escape or rescue, they shall have the bottom of the clear opening not more than 44” above the floor. Replacement or retrofit windows shall not diminish the clear opening below these measurements.

9.08 Fixed or operable window panel adjacent to a door where the nearest exposed edge is within 24” are of either vertical edge of the door in a closed position shall be tempered glass.

9.09 Skylights & Solar Tubes: Shall be installed per manufacturer’s specifications.

10. DRYWALL (GYPSUM BOARD, WALLBOARD, SHEETROCK)

STANDARD - WALLS, CEILINGS, AND OTHER INTERIOR PLASTERED SURFACES SHALL BE MAINTAINED IN A SOUND, CLEAN AND SANITARY CONDITION. ALL CRACKED OR LOOSE PLASTER, DECAYED WOOD, OR OTHER DEFECTIVE SURFACE CONDITIONS SHALL BE RESTORED.

10.01 Drywall Repairs: Repair ceiling and wall finishes to make surface smooth and uniform, free from any cracks, holes, loose joint tape, nail pops and indentations. Joint tape shall be used where repairs are needed at board joints. Where holes or sagging drywall are present, the damaged drywall shall be replaced to the nearest framing members.

10.02 Gypsum wallboard shall be ½" thick to match existing construction otherwise be ⅝" thick type "X" where required by code.

10.03 Gypsum drywall shall be installed with all external corners protected with metal corner beads. Ceiling and wall angles and inside corner angles shall be reinforced with the tape folded to conform to the angle and embedded into the compound.

10.04 All ends and edges of gypsum board shall occur over nailing members, except for joints at right angles to framing members. Tape shall be centered over the joints and embedded into the compound leaving sufficient joint compound under the tape to provide proper bond. All nails, screw heads, or dimple shall receive three (3) coats of joint compound or taping compound. Allow each application of compound to joints and nail heads to dry, then sand if necessary. Caution shall be used to avoid roughing of the wallboard paper. All areas inside the dwelling shall be textured. Patched wallboard shall match existing finish.

10.05 The garage shall be separated from the dwelling and its attic area by a minimum ½ inch gypsum board applied to the garage side. Garages beneath habitable rooms shall be separated from all habitable rooms above by not less than 5/8 inch Type X gypsum board or equivalent. Separation shall include taping all joints and applying joint compound to nail or screw heads. All holes shall be sealed including between skip sheathing. Install gypsum wallboard with nails or screws at 7" o.c.

10.06 Water Resistant Gypsum Wallboard: At showers, tubs and similar "wet" areas, install water resistant board. Apply with uncut long edge at bottom and spaced ¼" above fixture lip. Install with corrosion resistant fasteners. Can be applied on ceilings with supports at 12" o.c. Inspections are required before installation and before covering. Water Resistant Gypsum Wallboard shall not be used as a direct tile backer in wet areas. NO green board permitted as water resistive substrate.

11. TILE

STANDARD - ALL CRACKED, LOOSE OR MISSING TILE, DETERIORATED BACKING, MISSING GROUT, OR OTHER DEFECTIVE SURFACE CONDITIONS WHICH MAY SUBJECT THE BUILDING OR ITS OCCUPANTS TO DELETERIOUS EFFECTS SHALL BE ELIMINATED.

11.01 Tile work shall be subject to performance standard as set by the American National Standards Institute (ANSI) specification A 137.1 - 1980 for ceramic tile, and the Tile Council of America (TCA) 1982 Handbook for Ceramic Tile Installation.

11.02 Tile shall be equal or exceed the standard grade requirements as stated in American National Standards Institute (ANSI) specifications for ceramic tile, ANSI A 137.1 - 1980.

11.03 Tile in shower surrounds, tub/shower surrounds, vanity top, counter tops and floors shall be set on “Wonder Board”, “HardiieBacker”, “Durarock”, “DensShield”, mortar or other approved equal. If required, install a waterproof membrane over studs. Install board ¼” off of lip of bathtub or shower pan. Fasten to studs 6” o.c. with 1½” galvanized roofing nails or manufacture approved screws. Fastener heads should be flush with surface. Cover joints and corners with an approved tape and skim coat with the adhesive or mortar system that will be used to set the tile (when required by manufactures specifications). The ¼” space gap shall be filled with ceramic adhesive or caulk. Inspection required before installation and before covering. Backer Board on kitchen counter tops and vanity tops shall be supported by ¾” thick exterior plywood. All Backer Boards shall be installed per manufacturer’s specifications and instructions. Tile in front entry ways may be glued to wood with mastic.

11.04 All grout shall receive two (2) coats of sealer.

11.05 Tile on kitchen counter tops & tile on vanity top, shall extend a minimum of 4” for backsplash and side splash.

11.06 Contractor shall discuss with the owner prior to installing, the type of tile, method of installation, tile color, grout color, trim and accessories.

11.07 Adhere and grout tile ~~units~~ in strict compliance with specific manufacturer's recommendations. Butt tile units tightly to vertical surfaces, thresholds, nosings and edgings. Lay out tile work so as to minimize cuts less than one half a tile size. Scribe as necessary around obstructions and to produce neat joints, lay tight, even and in straight, parallel lines.

11.08 Match tiles for color and pattern by using tile from cartons in the same sequence as manufactured and packaged. Broken, cracked, chipped or deformed tiles are not acceptable.

11.9 Remove excess grout haze or other surface blemishes from tile, using neutral type cleaner. Protect installed tile work from damage.

11.10 Tile Regrouting: Remove all grout between tiles using proper tool, e.g. grout saw. Care to be taken not to damage tile. Regrout and seal.

12. EXTERIOR FINISHES

STANDARD - ALL EXTERIOR WALL COVERINGS SHALL BE FREE OF HOLES, CRACKS AND BROKEN OR ROTTED FINISH MATERIALS WHICH MIGHT ADMIT RAIN OR DAMPNESS INTO THE INTERIOR PORTIONS OF THE WALLS OR INTO THE OCCUPIED SPACES OF THE BUILDING.

12.01 All exterior walls shall have a minimum of 15# waterproof paper applied horizontally, starting at the bottom and lapping 3"; vertical joints lapped 6", unless using stucco. Stucco requires 2 layers of grade D paper over wood base sheathing.

12.02 Plywood or Hardboard Siding: Butt joints of siding shall occur over studs. Joints in adjacent pieces shall be staggered. Caulk all joints in new construction. Minimum thickness of plywood or hardboard siding for soffits and ceiling of exterior applications shall be a minimum of ⅜". Plywood siding shall be exterior type and shall bear the mark or label of a recognized association.

12.03 Aluminum and Vinyl Siding: Shall be installed in accordance with manufacturer's recommendations.

12.04 Aluminum and vinyl siding installation shall provide for the escape of water vapor by ventilating each space behind siding.

12.05 Stucco: Stucco shall be not less than three coats when applied over metal lath or wire fabric lath and shall be not less than two coats when applied over masonry, concrete or gypsum backing.

12.06 Patches: Break stucco so that edges are jagged and remove all loose stucco. Overlap wire one mesh and paper shall have a minimum of 6" lap. Stucco to be applied as new. Match existing pattern.

12.07 Color Coat: Prepare surface, remove loose and replace damaged surfaces, water blast, apply a binder/epoxy and color coat. If surface has been painted with multiple coats, sandblasting may be required before installing binder/epoxy and color coat.

13. FLOOR COVERINGS

STANDARD - FLOOR SURFACES SHALL BE MAINTAINED IN A SMOOTH, SAFE AND SANITARY CONDITION. DEFECTS IN FLOOR SURFACES OR IN THE SUPPORTING STRUCTURE WHEN DETERMINED TO BE HAZARDOUS SHALL BE ELIMINATED OR CORRECTED.

13.01 Preparation: All surfaces shall be clean, dry and smooth. For the purpose of this section, closets and pantries are to be considered as part of the room they serve. The contractor is responsible to remove and to reinstall all appliances and fixtures and move all items over 50 lbs.

13.02 New and existing concrete slab shall be tested for moisture by use of a moisture meter. In areas with existing vinyl, remove existing vinyl, sweep clean and prepare surface per manufacturer's instructions. In areas with carpeting, remove existing carpeting and pad, sweep clean and prepare area to receive flooring.

13.03 Raised Wood Floor: In areas with vinyl, remove existing vinyl and underlayment, sweep clean and prepare surface per manufacturer's instructions to receive new flooring. In areas with carpeting, remove existing carpet and pad, sweep clean and prepare area to receive new flooring. All minor sub-floor repairs to be included.

13.04 Vinyl Floor Covering shall be Armstrong Star Step, Mannington Jumpstart, Congoleum Highlight or equivalent quality and shall be installed as single sheet. Where seams are required, Inspector shall make approval prior to installation. Sheet vinyl shall be installed as per manufacturer's requirements. On wood floors, install underlayment per Section 4.17.

13.05 Carpeting shall be wall-to-wall installations secured with tackless strips. Carpet shall be a minimum of 32 ounce advanced generation nylon fiber, or an approved equal, with a five (5) year manufacturer's warranty rated for the following properties: soil and stain resistant, resistance to fading and color loss, static control, durability and pile resilience. Pad shall be a minimum of ½" thick rebond with a six (6) pound density. Trim doors as needed for a ½" clearance above carpet. Include metal carpet edge at all transitions. Ultron, Antron and Anso V are examples of carpet fiber meeting the above specification. Carpet estimate should be based on ~~$35~~ $45 per yard for removal, carpet, pad and installation.

13.06 Hardwood Floors: a licensed flooring Contractor shall do work. Remove and replace any damaged hardwood. Set all nails. Apply filler in gaps between boards, knotholes, splits and nail heads. Sand floor in three passes. The first two with a drum sander and the third with a polisher-buffer. Stain if necessary. Finish with three coats of polyurethane.

13.07 Laminate Flooring: All flooring applications shall be submitted to Neighborhood Preservation Program prior to installation.

13.08 Duraceramic Flooring: Shall be installed and sealed per manufacturer's instructions.

13.09 All other flooring applications shall be submitted to Neighborhood Preservation Program prior to installation.

14. INSULATION

STANDARD - NECESSARY CORRECTIVE MEASURES SHALL BE REQUIRED TO ENSURE THAT ALL BUILDINGS HAVE MINIMUM THERMAL PROTECTION. WHERE PRACTICAL THE STATE ENERGY REGULATIONS SHALL BE MET.

a) WALL INSULATION SHALL BE DONE ONLY WHEN FRAMING IS EXPOSED.

b) ALL DOORS AND WINDOWS SHALL BE ADEQUATELY WEATHERSTRIPPED TO REDUCE THE INFILTRATION OF AIR INTO THE LIVING AREAS AND ANY LOOSE OR BRITTLE CAULKING AROUND DOOR AND WINDOW FRAMES SHALL BE REPLACED OR INSTALLED NEW WHERE NONE IS PRESENT.

c) WATER HEATERS SHALL BE INSULATED FOR THE FIRST 5' OF EXPOSED HOT AND COLD WATER LINES IN UNCONDITIONED SPACES. NO INSULATION SHOULD BE INSTALLED CLOSER THAN 6" FROM THE FLUE.

14.01 Thermal insulation materials shall be delivered to the job site with seals unbroken and labels intact.

14.02 Blown or poured type insulation shall not be installed in attic space if roof slope is less than 3 to 12.

14.03 Insulation materials shall not readily absorb or retain moisture, shall be noncombustible. Use fiberglass blankets or batts, or Mineral Wool, or other cellulose loose fill. Install only asbestos-free approved material.

14.04 In existing construction a minimum of R-30 insulation shall be placed in the attic area. A minimum of 3½" thick R-13 insulation shall be placed in the exterior wall space wherever the framing is stripped or exposed to permit installation.

14.05 In new construction, insulation will be installed as follows and in accordance with the California Energy Standards:

a. Walls - R-13
b. Underfloor - R-19
c. Ceilings – R-38
d. Roof - See Built-up Section 7, R-19 assembly

14.06 Insulation dams shall be installed at attic access opening, gas vents, recess light fixtures, knob and tube wiring and eave vents. Angle dam shall be placed at eave vents to allow insulation to extend to the top plate and allow unrestricted airflow above.

14.07 Seal around all openings in exterior covering. Seal around any opening in sole plate or in top plate.

14.08 The Contractor shall provide owner with a written certificate as to the insulation value added.

15. PAINT

STANDARD - ALL EXTERIOR SURFACE MATERIALS, INCLUDING WOOD, COMPOSITION, OR METAL SIDING, SHALL BE MAINTAINED WEATHERPROOF AND SHALL BE PROPERLY SURFACE PAINTED WHEN REQUIRED TO PREVENT DETERIORATION.

TO ENHANCE THE APPEARANCE OF THE STRUCTURE AND OF THE NEIGHBORHOOD EXTERIOR PAINTING SHALL BE INCLUDED AS AN ITEM OF REPAIR WHEN DETERMINED NECESSARY.

INTERIOR SURFACES SUBJECT TO EXCESSIVE HUMIDITY, WATER SPLASH, OR OTHER MOISTURE EXPOSURE SHALL BE PROTECTED WITH SURFACE COATINGS SUITABLE FOR ENVIRONMENTAL CONDITIONS OF THE LOCATION.

THE HUD GUIDELINES ON LEAD PAINT SHALL BE FOLLOWED.

15.01 Exterior and interior paints, primers, stains, enamels and related painting materials shall be lead-free. While preparing for repainting i.e., scraping, water blasting etc., contractor should encounter paint containing lead he should inform owner and take necessary steps to include Lead Safe Work Habits as required by the HUD guidelines for lead based paint, See Section 20.

15.02 All paints and other coatings shall be Kelly Moore, Glidden, Sherwin-Williams, Dutch Boy, Olympic, Behr, Benjamin Moore or approved equal. All paint materials shall be delivered to the site in manufacturer's sealed cans.

15.03 Apply paint in accordance with the manufacturer's specifications. Use applicators and techniques best suited for the type of materials being applied. Work shall be uniform, of even color, texture and sheen, and smooth and free from defects. Finish shall not be smeared, spattered or run over adjoining colors or materials. Cut in lines shall be straight, sharp and clean.

15.04 Paint application shall consist of a minimum of two coats on old work and three coats on new work as required for thorough coverage, unless otherwise specified in the Deficiency List. Primer or sealer shall be considered as first coat. Undercoats shall be tinted to the approximate shade of, but lighter than, the finish coat. All coats must be thoroughly dry before applying succeeding coats. All colors must be selected and approved by the homeowner. Contractor shall discuss with the owner prior to submitting estimate, the colors selected.

15.05 All interior walls and ceilings shall be flat latex. All bathrooms, laundry rooms, kitchens and trim are to receive semi-gloss enamel. The homeowner shall be permitted to choose two (2) standard or non-custom colors per room, one for the walls and ceilings, and one for the trim. Closets to be painted the same as adjoining rooms.

15.06 Exterior painting shall include all surfaces visible and accessible from the outside. This includes doors, jambs, trim, wood and steel windows in any position, open or closed. Exterior paint shall be labeled for exterior applications. All exterior walls shall be flat acrylic latex. All exterior trim shall be a low sheen or semi-gloss acrylic latex. Wood and painted screens shall be painted on all surfaces. The owner shall be permitted to choose two (2) standard or non-custom colors, one for the body of the house and one for the trim.

15.07 Interior painting shall include all surfaces visible and accessible from the inside. This includes doors, jambs, trim, wood and steel windows in any position, open or closed.

15.08 Doors to include tops, bottoms, faces and edges (6 sides). Scrape door edges to remove built up drips and sags. All windows, doors and screen frames shall be left operable without damaging paint and without paint bridging to other components.

15.09 Finish hardware, cover plates, fixtures, curtain rods, bath accessories and similar fixed items shall be removed during painting or staining or otherwise protected. All items to be reinstalled upon completion of painting.

15.10 All new metal or iron surfaces requiring paint application shall be shop primed or shall receive a job applied prime coat before final finish coats are applied.

15.11 New stain grade wood shall have one coat of stain, one coat sealer and three coats of clear finish. Finish cabinet interiors with one coat oil stain and one coat sealer. Existing

stained and finished wood surfaces shall be stripped, prepared; restained if needed and have one coat of sealer applied and three coats of clear finish.

15.12 Kitchen and bathroom cabinets shall receive one coat of primer compatible with the existing finish and 2 coats of an oil-based paint. Include both sides and all edges of doors, the face and all edges of drawer faces and all edges of cabinet openings.

15.13 Prepare exterior for painting. Water blast, scrape, wire brush, sand, seal, patch and caulk as required for proper finish. Replace missing or excessively damaged woodwork, reset and fill all loose or protruding nails. Caulking shall be applied prior to the two finished coats. The specified sanding is intended for adhesion purposes only, not for smoothing old paint layers or exposing bare wood. All loose, curled, peeling or blistered paint layers shall be removed. Missing, loose, cracked or damaged window putty shall be replaced or restored as needed. Contractor shall discuss with the owner, prior to submitting estimate, the responsibilities of the parties for the protection, removal or trimming of landscape plants and architectural features.

15.14 Prepare interior for painting. All oily or greasy surfaces shall be scrubbed clean, other areas shall be free of dust or dirt. Loose or peeling paint shall be removed by scraping and sanding. Glossy, glazed or dense surfaces shall be properly etched. Mildew shall be removed with a solution specified by the paint manufacturer. All other stains shall be sealed to prevent bleed through as needed. Neatly fill nail holes, cracks and other surface defects with a suitable putty or compound flush with the profile of the surface. For the purpose of this section, closets and pantries are to be considered a part of the room they serve. Existing painted cabinets are to be considered trim and a part of the room they are in.

15.15 All paint over-spray, drips, old paint chips and other debris shall be removed and disposed of. All glass and screens shall be paint free.

15.16 Mildew: Remove mildew by scrubbing the surface with one cup of laundry detergent (or trisodium phosphate) and one quart of household bleach dissolved in three quarts of water. Rinse with fresh water, then immediately apply a solution of 50% bleach and 50% water. Allow this to dry thoroughly before applying paint or stain.

16. ACOUSTICAL SPRAYED CEILINGS

STANDARD - CRACKED OR LOOSE ACOUSTICAL SURFACES SHALL BE REPAIRED OR ENCAPSULATED.

16.01 New ceiling: Tape, top and spray acoustical. Protect walls and floor. Have a licensed contractor install the acoustical.

16.02 Pre-sprayed: Remove existing and/or prepare surface and install a sealer. Protect walls and floor. Respray whole room, not patches. Have licensed contractor install the

acoustical. Existing ceiling sprayed with material containing asbestos shall be treated and/or handled in accordance with State and Federal Health and Safety Codes.

17. HEATING, VENTILATION AND AIR CONDITIONING

MECHANICAL EQUIPMENT:

STANDARD - ALL MECHANICAL EQUIPMENT IN THE BUILDING SHALL PROVIDE FOR SAFETY IN OPERATION, ADEQUATE CAPACITY FOR THE INTENDED USE, FREEDOM FROM OBJECTIONABLE DRAFTS, REASONABLE QUIETNESS OF OPERATION AND REASONABLE DURABILITY AND ECONOMY OF MAINTENANCE. IN ADDITION, ALL MECHANICAL EQUIPMENT SHALL BE PROTECTED FROM EXCESSIVE MOISTURE, BLOCKS, CORROSION OR OTHER DESTRUCTIVE ELEMENTS.

DISTRIBUTION OF HEAT:

STANDARD - EVERY HEATING SYSTEM SHALL BE CAPABLE OF MAINTAINING AN INTERIOR TEMPERATURE OF AT LEAST 68 DEGREES FAHRENHEIT WITHIN THE KITCHEN, BEDROOMS, DINING ROOMS, LIVING ROOM AND BATHROOMS OF ALL DWELLING UNITS. IT IS RESPONSIBLE FOR HEATING DURING A 0 DEGREES FAHRENHEIT EXTERIOR TEMPERATURE.

17.01 Heating system shall be sufficient to maintain an inside temperature of 68 degrees at a point 3 feet above the floor in all habitable rooms. Contractor to provide heat loss calculations in sizing HVAC equipment~~s~~. In existing heating systems where ductwork is insulated with material containing asbestos contractor shall take protective steps as outlined by State Health and Safety Codes.

17.02 All appliances shall be installed per manufacturer's instructions and specifications that shall remain on job site following installation. Estimate to include related alterations and patching as well as electrical, plumbing, and mechanical installation to include, excess flow valve, a new gas flex connector and new vent system. All installations to include a remote wall thermostat.

17.03 Wall heater are limited to replacement units only and to be Empire, Williams, Atlas or Cozy top vent model or approved equal. Wall heaters to be a minimum 35kbtu for single sided units and 55kbtu (fan forced style) for double sided units. Rear discharge kit with damper is to be installed where heater is replacing a double wall unit or a unit with

rear discharge. One side of the wall shall be completely open for proper installation and inspection. Walls shall be patched and made ready for paint. Recess units into wall where possible. See Standard Drawings, pages 65 - 69. BTU rating shall be in accordance with Heat Loss calculations.

17.04 Where new heater is installed to replace a floor unit, floor is to be patched and the existing unit with flue is to be removed. If floor is to be carpeted, wood patch may be plywood. If floor is to remain hardwood, patch is to be hardwood, finished to match existing floor. Gas line is to be capped off and tested for leaks.

17.05 Stud spaces that contain a type BW gas vent shall open into an attic or into a ventilated roof flashing equipped with a storm collar. In lieu of a ventilated roof flashing, this stud space may be ventilated by providing an opening, 6 x 14, in the wall covering, within 12 inches of the upper portion of the stud space, opening into a room served by the wall furnace. Opening to be covered with a factory enamel finish grill.

17.06 A complete forced air central furnace shall be 94% efficiency or above and include but not limited to all necessary ceiling, floor and wall registers, dampers, return air grilles, insulation, duct work, related alterations and patching, as well as electrical, plumbing, and mechanical. Installation to include a new gas flex connector and B vent. All installations to include a remote wall thermostat. Forced air central furnaces, central air conditioning and heat pumps shall be sized and balanced by a licensed Warm-air Heating, Ventilating and Air Conditioning Contractor. It shall comply with State of California Title 24 energy requirements. A copy shall be submitted to Neighborhood Preservation Program. Existing ducts as well as new duct work shall be Duct Blaster tested, and all leaking ducts shall be repaired.

17.07 Evaporative Cooler: CFM rating of cooler is to comply with manufacturer's recommendation for the size of the area to be served. All coolers shall be on a separate electrical circuit. All coolers shall have a water line connected to cooler. All coolers shall have water and electrical disconnects/shut off at cooler. All coolers shall be provided with a canvas cover, maintenance instructions and warranties.

17.08 Downdraft and side draft models shall have two-speed motor, duct work, registers, and supports (within roof or to ground). All installations to include all necessary flashing and patching.

17.9 Rooms containing bathtubs, showers, spas and similar bathing fixtures shall be mechanically ventilated. Exhaust ducting for bathroom fans, kitchen hoods and clothes dryers shall include an installed back draft damper. Ducts shall terminate 3' away from any openings.

17.10 Kitchen Exhaust Hood: Install hood per manufacturer's specifications and duct to the outside. Include all electrical and patching of the outside.

FIREPLACE

17.11 Sweep: Have a professional chimney sweep clean out the fireplace.

17.12 Glass Door: Provide owner with $450 fireplace glass door allowance and install.

17.13 Patch Mortar: Patch mortar where missing or loose on interior and exterior.

17.14 Spark Arrestor: Install a UL approved spark arrestor on fireplace.

18. PLUMBING

STANDARD - ALL PLUMBING FIXTURES AND PIPING SHALL BE FREE OF LEAKS, CLEAN, SANITARY, FREE OF CLOGGING, CROSS CONNECTIONS, BACK-SIPHONAGE, CONNECTED TO AN APPROVED SEWAGE DISPOSAL SYSTEM OR APPROVED WATER SUPPLY, PROVIDED WITH HOT AND COLD RUNNING WATER NECESSARY FOR ITS NORMAL OPERATION AND ADEQUATE PRESSURE. WHERE POTENTIAL HEALTH AND SAFETY HAZARDS ARE DETERMINED TO BE PRESENT, REPLACEMENT SHALL BE MADE.

WELLS:

STANDARD - ALL NEW AND EXISTING WELLS SHALL BE TESTED FOR SAFETY BY ENVIRONMENTAL HEALTH. ALL OPEN WELLS SHALL BE CAPPED.

SEPTIC TANKS:

STANDARD - ALL EXISTING SEPTIC TANKS SHALL BE INSPECTED AND SOIL SHALL BE TESTED BY ENVIRONMENTAL HEALTH OR ANOTHER CERTIFIED ENTITY.

18.01 Water Heater: The minimum capacity for a water heater shall meet the 2007 California Plumbing Code. Water heaters must have a minimum 6-year warranty. Install pressure/temperature relief valve and extend the ¾" metal relief line to the exterior as per code. Heater shall have built-in R-16 insulation. Heaters installed in the garage shall have burner 18" above the floor, unless otherwise listed. Installation to include new excess flow valve, new gate valve on the cold water supply at or near the water heater, gas flex connector and gas shut-off valve, Type B vent pipe and needed pipe alterations. New and existing water heaters shall be strapped at points within the upper one-third and the lower one-third with ¼" x 3" lag bolts into studs to resist horizontal displacement due to

earthquake motion. Piping leading to and from water heaters must be insulated with at least R-4 insulation for the first 5' of exposed pipe closest to the water heater, no insulation should be installed closer than 6" from the flue. Connections to piping shall be compatible, e.g. brass nipples are required to connect water heater to copper connectors or piping. Provide required combustion air. Provide a "Smitty Pan", or an approved equal, where damage may result from a leaking water heater, with a ¾" drain to an approved location. Install per California Plumbing Code.

18.02 Pressure and temperature protection devices: Pressure and temperature relief valves installed on water heaters shall have the heat-sensing probe extended a minimum of 2" into the storage tank. Install a drain line (not smaller than the relief valve outlet) to terminate outside of building or another pre-approved location. No part of the pressure and temperature (P & T) drain line shall be trapped.

18.03 Over temperature gas shut-off valve: Where over temperature and over pressure protection is required and a non-trapped drain line would be impractical or impossible, a Watts 210 over-temperature gas shut off valve may be substituted, provided an additional pressure relief valve and drain is installed in another approved location in the water piping system. See Standard Drawings, page 75.

18.04 Insulation for existing water heaters: Existing water heaters having less than R-12 insulation shall be fitted with an R-12 insulation blanket. The first 5' of exposed hot and cold water piping shall be insulated with a minimum of R-4 material. No insulation should be installed closer than 6" from the flue.

18.05 Bathtub shall be a white cast iron tub unless otherwise specified. Include new trap and new waste and overflow with turnstop, trip lever or pop-up. Tub to be Kohler-Villager or approved equal. Waste and overflow shall be installed at frame inspection. Tub shall be set level and in proper alignment with reference to adjacent walls.

18.06 Shower and Tub Surrounds: Remove wall coverings, tub/shower valves, shower head, replace any damaged wood, wire brush and treat surface growth, install new valves and call for inspection. Exterior walls shall be insulated. All surrounds shall extend to 70" above the drain and a minimum of 2" outside enclosure. Bathtub only, without showerhead, surrounds shall extend 18" above top of tub.

18.07 Shower and tub surrounds shall be cultured marble unless otherwise specified. Cultured marble to be installed over approved materials - see Section 10. Cultured marble shall be installed as per manufacturer and installation to include a soap/shampoo dish. Cultured marble to be a minimum of ⅜" nominal thickness.

18.08 Bathtub/Shower Valves: Tub/shower controls (mixer valve), tub spout, risers and shower head to be Moen, Price-Pfister, Peerless, Delta, American Standard or approved equal. Color shall be chrome unless otherwise specified. Single, double, or triple handles per owner's choice. Valves to be pressure balanced or thermostatic mixing valves.

18.09 Vanity Cabinets: See Section 6 - Cabinets.

18.10 Vanity top and sink shall be cultured marble with integral bowl unless otherwise specified. Cultured marble to match tub/shower surround unless otherwise specified. Vanity top to have a minimum of 4” back splash and side splash. Side splash required where top butts wall.

18.11 Vanity faucets shall be: Moen, Price-Pfister, Delta, Peerless, American Standard or approved equal. Color shall be chrome unless otherwise specified. Single or double handle per owner. Installation to include new waste assembly with lift rod, tail piece, “P” trap, trap arm, angle stops, escutcheons, approved connectors and all hardware for complete installation.

18.12 Accessories: Includes towel bars, tissue holders, towel rings, soap dish, toothbrush and tumbler holder. Owner to approve location before installation. Accessories to be chrome unless otherwise specified in contract.

18.13 Water closets shall not exceed 1.6 gal/use and be grade A quality. Color shall be white unless otherwise specified. Installation to Include new seat, wax ring, brass bolts (or equivalent), approved connectors, angle stop, escutcheons, and all hardware for complete installation. All water closets shall be sealed at floor. Owner to have choice of elongated or round bowl.

18.14 Enclosures shall be Sterling, Kohler or approved equal. Tubs shall have L-shape track and a towel bar. Shower doors shall have a vinyl seal. Metal to be silver. Glass to be obscure.

18.15 Shower pans:
a. Manufactured shower receptors shall have UPC approval.
b. Built-up shower receptors, See Standard Drawings, pages 71 – 72.

18.16 Medicine/Bath Cabinets shall be recessed unless the structure (plumbing vent) makes it impractical or if approved by owner prior to installation.

18.17 Grab/Handicap Bars: Grab bars shall be of substantial strength, having tubing ends terminated in factory installed attachment flanges. Each flange shall be secured with three suitable screws, driven into solid backing. Installations in damp or wet locations shall be corrosion resistant, e.g. stainless steel, durable chrome finish or baked- on vinyl colors. Contractor to discuss location with owner.

18.18 Kitchen Faucet: Shall be Moen, Price-Pfister, Delta, Peerless, American Standard or approved equal; single or double handle with or without spray rinse (owner's choice). Installation to include new angle stops, escutcheons, and connectors. Color shall be chrome unless specified in contract.

18.19 Appliances: Owner shall select manufacturer and model. Contractor shall install per manufacturer's specifications. Installation to include all electrical, plumbing and mechanical required. Color shall be white unless otherwise specified in contract.

18.20 Kitchen Sink: 18 Gauge stainless steel, with underside fully undercoated, porcelain on cast iron, or approved equal. Installation to include new basket strainer and drain assembly, new angle stops, escutcheons, tailpiece, “P” trap, trap arm and connectors. Single or double bowl, choice by owner. Color shall be white unless otherwise specified in contract.

18.21 Counter tops shall be any solid surface material within the per linear foot allowance. Ends shall be finished. Edges shall be bull nosed or square per owner's choice. Counter tops to have a minimum of 4” back splash and side splash. Side splash required where top butts wall.

18.22 Kitchen Cabinets: See Cabinets, Section 6.

18.23 Garbage disposal shall be a minimum ¾ horsepower InSinkErator Evolution, (Essential or Premier), or an approved equal. Price to include all electrical, plumbing and patching. Include change in drain, rough in height if necessary.

18.24 Laundry trays to be reinforced polyester fiberglass secured in place. Include new two-handle faucet, trap and waste fitting. Laundry standpipe to be 18” to 30” in length above the p-trap and the trap between 6” to 18” above the floor. Standpipe to be minimum 2” in diameter.

18.25 Water Lines: Remove existing all galvanized pipes. Install copper (hot and cold) water lines from a new exterior gate valve throughout the building, include escutcheons, angle stops, minimum of two hose bibbs, backflow preventers, risers, gate valves, laundry valves and water heater connections. No solder or compression type connections shall be allowed on hose bibbs or washing machine bibbs. Connections shall be secured to properly threaded drop ear fittings securely fastened to adequate backing with screws. Threaded nipple extensions shall be brass. No galvanized or ferrous pipe and/or nipples shall be installed in a copper water system. Reinstall grounding straps and service ground. Patch surface and prepare for painting. Solders and fluxes with a lead content which exceeds two-tenths (0.02) of one (1) percent are prohibited in piping system. Pressure regulators shall be installed where pressure exceeds 80 PSI. Where there are quick acting valves (dishwashers and washing machines) pressure-absorbing devices shall be installed to omit air hammering.

18.26 Water service line: Install copper water supply line from meter to new building gate valve. Buried horizontal water piping shall be installed 12” below finished grade. Backfill with compacted clean fill. Reinstall service grounds.

18.27 Dielectric fittings shall be installed where galvanized pipe and copper pipe join or a minimum of 6” brass nipple shall be used.

18.28 Drain Lines: Remove existing drain lines. Install ABS drainage system to new sewer clean out that is at least two feet outside the building; include new traps. New drainage may be connected to existing vents. Patch surface and prepare for painting.

18.29 Gas: Remove existing piping and install new gas piping. Include new shut-offs and flex connectors. Ferrous gas piping shall be protected from corrosion by approved coating or wrapping material where in contact with earth or within 6" of grade. Piping on the exterior shall be zinc coated (galvanized). Piping within the interior of the building to be black or zinc coated. Include excess flow valve, new shut off valves and flex connectors. Patch surface and prepare for painting. Reinstall service ground. Provide test gauge and 10 psi for 15 minutes or 25 psi air test after walls have been closed.

18.30 Sewer Lines: The contractor shall obtain from the administrative authority the required permits, inspections and final. Backfill with clean material. Compact fill and restore landscaping or surface affected by excavation. Material shall be plastic schedule 40 or better pipe.

18.31 Septic Tank: The contractor shall obtain from the administrative authority, e.g. Environmental Health, the required permits, inspections and final.

18.32 Water Well: The contractor shall obtain from the administrative authority, e.g. Environmental Health, the required permits, inspections and final.

18.33 Water Heater Enclosure: Enclosure shall be a "Spacemaker" or equivalent quality. Install per manufacturer's instructions. Water heater and enclosure shall be set on slab 3" minimum above surrounding natural grade. Paint enclosure to match building.

18.34 New stoves: All new stoves shall be of a type that does not maintain a standing pilot light. Provide excess flow valve, new flex connector and shutoff valve.

19. ELECTRICAL

STANDARD - ALL EXISTING WIRING AND ELECTRICAL EQUIPMENT, WHERE CONTINUED SERVICE IS CONTEMPLATED, SHALL NOT BE A POTENTIAL SOURCE OF ELECTRICAL HAZARD OR IGNITION OF COMBUSTIBLE MATERIAL. WHERE POTENTIAL HAZARDS ARE DETERMINED TO BE PRESENT, REPLACEMENT OF EXISTING WIRING AND EQUIPMENT SHALL BE MADE AND EXISTING FACILITIES THAT ARE INADEQUATE TO MEET PRESENT OR ANTICIPATED DEMANDS SHALL BE APPROPRIATELY INCREASED.

ALL REPLACEMENT OF EXISTING WIRING AND UPGRADE OF ELECTRICAL EQUIPMENT SHALL BE DONE IN CONFORMANCE WITH THE NATIONAL ELECTRIC CODE.

19.01 All materials and installation methods shall be in conformity with the National Electrical Code as adopted with County amendments and the requirements of the local utility company.

19.02 Lighting fixtures and appliances shall be installed per manufacturer's instructions. All new fixtures to include new bulbs and/or lamps. Owner to select manufacturer and model unless otherwise specified.

19.03 All wiring devices and fixtures shall be approved by Underwriters Laboratories (UL) or Canadian Laboratories.

19.04 All defective or abandoned wiring and equipment where accessible shall be removed, including the removal of service terminals and insulators.

19.05 Service Change: Remove existing and install a minimum 125-amp combination meter/breaker panel with a minimum of 20 standard circuit capacity. Connect existing circuits, grounds and bonds. Include new service conduit, weather head, breakers, flashing and service entrance conductors. Label new and existing circuits. Patch surface and prepare for painting.

19.06 The contractor shall make and/or arrange for electrical utility connections and shall pay for all connections.

19.07 All new electrical outlets shall be grounded and spaced throughout the room so as to provide maximum convenient usage by the occupants. See section 210.52 of NEC. The contractor shall review with the owner the location(s) of receptacles, switches and fixtures before they are roughed in. Where gyp-board has been removed and outlets have been exposed, the outlets shall be grounded and a new receptacle installed.

19.08 Bathroom Receptacle: At least one GFCI (ground fault circuit interrupter) receptacle shall be installed within 36” of the outside edge of each basin, and not more than 12” below the countertop if installed on the side or face of the basin cabinet. Cover old outlet location. Include all patching and prepare for paint.

19.09 GFCI receptacle in existing location. GFCI receptacle need not be grounded to a water line even though an equipment ground is not available.

19.10 Smoke detectors are required on all projects and shall be located in accordance with approved manufacturer's instructions and current California Building Codes. Smoke detectors shall come complete with battery. In areas of new construction or where gyp-board is removed, the smoke detector shall be 110 volt with battery backup.

19.11 Aluminum conductors to have oxidation inhibitor applied prior to connecting and to be adequately tightened to insure solid contact. Apply neatly and per manufacturers specifications.

19.12 Appliances fastened in place, such as, evaporative cooler, disposal, furnaces, dishwashers, microwave, compactors, air conditioner, etc., shall be supplied by a separate 20 amp branch circuit.

19.13 Branch circuit conductors supplying household ranges, wall mounted ovens, counter cooking units, and other household cooking appliances shall not be less than 50 amperes for free standing or drop-in electric ranges, 40 amperes for single and double wall mounted ovens or counter mounted cooking units.

19.14 Device removal. In all circuits, the continuity of a circuit shall not be dependent upon device connections, such as lamp holders, receptacles, switches, etc., where the removal of such devices would interrupt the continuity of the circuit. Exception: GFCI feed-through devices to be done by rough inspection.

19.15 Multiwire branch circuit shall be single pole breakers with approved handle tie.

19.16 Grounding-type receptacles shall be used as replacements for existing non-grounding types and shall be connected to a grounding conductor. Where a grounding means does not exist in the receptacle enclosure either a non-grounding or a ground-fault circuit interrupter type of receptacle shall be used. A grounding conductor shall not be connected from the ground-fault circuit-interrupter-type receptacle to any outlet supplied from the ground-fault circuit-interrupter-type receptacle.

19.17 Kitchen Remodels: Two or more 20 ampere small appliance branch circuits shall be provided for all receptacle outlets in the kitchen and pantry. All 125 volt, single phase, 15 and 20 ampere receptacles installed above all counter top surfaces shall have ground-fault circuit-interrupter protection. Receptacles shall be placed at:

a. Counter space wider than 12”.

b. Kitchen counter receptacles shall be installed so no point along the wall line is more than 24” horizontally.

c. Island with counter tops 12” or wider shall have at least one receptacle. Islands divided by sink, cook top or refrigerator requires a minimum of 2.

19.18 Ceiling Fan and Box: Install UL approved fan box and install ceiling fan.

20. LEAD-BASED PAINT-SAFE WORK HABITS

Note: ALL WORK TO BE DONE IN ACCORDANCE WITH THE NEW HUD LEAD-BASED PAINT REGULATION. THE GENERAL CONTRACTOR IS RESPONSIBLE FOR OBTAINING LEAD CLEARANCE. CONTRA COSTA COUNTY NEIGHBORHOOD PRESERVATION PROGRAM WILL PAY FOR THE INITIAL LEAD CLEARANCE TEST. ANY ADDITIONAL COST TO ACHIEVE CLEARANCE FOR TESTING, CLEANING, LAB WORK, LEAD DUST SAMPLING, ETC., WILL BE THE GENERAL CONTRACTOR'S RESPONSIBILITY. A LEAD CLEARANCE REPORT MUST BE SUBMITTED BEFORE FINAL INSPECTION CAN BE REQUESTED.

A LEAD CERTIFIED WORKER IS REQUIRED TO REMOVE MATERIAL CONTAINING LEAD, BUT A NON-CERTIFIED WORKER MAY INSTALL NEW MATERIAL WHERE THERE IS NO LONGER ANY LEAD DANGER.

I. INTRODUCTION

A certified individual or contractor should only undertake the removal of lead-based paint. The improper conduct of this work could result in temporary or permanent injury to any or all of the following:

- Workers
- Residents, especially young children, who live in or near the structure;
- Families who move into a structure contaminated with lead dust from improper removal practices;
- Family members, especially young children, living in the homes of the workers.

Lead-based paint does not always present an immediate hazard when it is in good condition. However, when it is disturbed during the course of certain activities it can be easily inhaled and/or ingested resulting in an elevated blood lead level.

Workers must be aware of the dangers that go along with removing lead-based paint. Supervisors must be especially aware of the hazards. More importantly, they must know about hazards and how to avoid them in order to be able to provide direction for workers who may not be as aware of or who may be careless.

Actual removal of lead-based paint is a process that uses a sequence of steps. The process can fail at any of these steps and thus present an immediate or future health hazard. It is critical for everyone involved in the work process to fully understand all of the steps and the risks. The elements necessary to safely complete a lead-base project are as follows:

- Occupant Protection
- Worker Protection
- Containment
- Lead-based paint removal methods
- Daily Cleanup Procedures
- Controlling Off-Site Contamination
- Final Cleanup Procedures

II. OCCUPANT PROTECTION

When planning a lead project, the program, with the input from the contractor and the inspector/'assessor, will determine the need for relocation of occupants and belongings. This decision must be based only upon health and safety issues, not economics or convenience.

If the surface of lead paint is to be broken, under most circumstances occupants and their belongings must be temporarily relocated. Relocation may not be necessary if:

- The work is of a very limited scope (e.g. one room of the unit); and
- The work and cleanup can be accomplished in one 8-hour day; and
- The unit is still habitable in a practical sense (access to kitchen and bathroom); or
- The work is exclusively on the exterior of a building in which the interior environment can be effectively sealed.

III. CONTAINMENT

A successful job means containing all lead within the work area so that lead is not getting into adjacent areas or units and/or the outside environment. Containment is necessary whenever a lead-painted surface is broken. Even when encapsulation is the only strategy to be used, there is still the need for containment measures.

Interior containment procedures consist of the following:

- The removal of all movable objects from the work area. It is recommended that any carpeting present (including wall–to-wall) be removed and thrown away because it is nearly impossible to clean lead dust from carpets. Workers should wear protective coveralls and respirators during the removal of carpet
- Floors and other horizontal surfaces should be covered with 6-mil plastic, secured with duct tape or ½" heavy-duty staples to cover exposed areas
- Openings to rooms and/or attached units must be sealed off with 6-mil plastic and tape. When a window itself is to be removed more stringent containment measures will be necessary to protect outside environment. Securing 6-mil plastic to the exterior window frame with fasteners and duct

tape in order to contain any lead particles or dust within the work area does this.

- Create barriers between work and non-work areas by using two layers of 6-mil plastic; one on one side of the doorframe and the other on the opposite side with the frame. Flaps for entry should be offset from each other.
- Cover all non-movable objects with 6-mil plastic. Additional layers of plastic should be considered in some locations such as high traffic areas.
- Shut down forced-air heating and a/c systems and seal and clean all air intakes and exhaust points with HEPA vacuums.

Exterior containment is more difficult. Depending upon the method, exterior work can produce either liquid or dry waste. Containment of liquid waste is achieved by:

- Placing 6-mil plastic as close to the building foundation as possible and secure.
- Extending the plastic a sufficient distance to contain runoff. Raise the outside edge of the plastic to trap liquid waste.
- Sealing all seams with tape.
- Having containers available to hold liquid waste for later transfer and disposal.
- Pumping, vacuuming or bailing liquid waste for transfer to disposal facility.

The following steps accomplish the containment of dry waste from exterior:

- Place 6-mil plastic as close to the building foundation as possible and secure to the building.
- Extend the plastic out from the foundation a distance of ten to twenty feet and secure the plastic. If the building is higher than two stories the plastic should extend five additional feet to each story.
- Remove as much of the surface plastic as practical at the end of each workday. If there is any doubt about the ability of the plastic to remain intact overnight, it should be removed. If the plastic is left in place, barricades must be erected to keep children and others away.
- Erect vertical shrouds if constant wind speed exceeds 15 mph. Work should not take place when high winds prevent work from occurring in a manner both safe to the worker and protective of the environment.

Successful containment on a paint site includes provisions for storage of liquid and dry waste (if needed). Provisions for safe storage include the following:

- Designate secure area(s) and limit access.
- Collect liquid waste in 55-gallon drums or smaller.
- Wrap or bag dry waste in 6-mil plastic/bags and store in a covered dumpster.
- Separate hazardous from non-hazardous wastes.

IV. LEAD-BASED WORK METHODS

There are two fundamentally different strategies for the removal of lead-based paint. One calls for the removal and the other leaves the paint in place, but covers it to make it inaccessible. The removal strategy is accomplished by:

- Replacement- Accomplished by removing both the paint and it's substrate and disposing of both. The removed components are then replaced to complete the job.
- Covering – Accomplished by enclosing the painted surface with a durable substance such as drywall, paneling, metal, siding, or some other construction material.
- Encapsulation – accomplished by coating or sealing the lead based paint with some durable coating, which is applied as a liquid to the painted surface. Lead-free paint is not to be considered as an encapsulant.

Replacement is defined as the removal of components that have lead-painted surfaces and installing new components free of lead-containing paint. Replacement should be considered for components that can be easily removed such as trim, windows, doors, etc.

To control dust during removal, mist or wet-spray the affected component and surrounding area before removal. Do not soak components.

Carefully remove the components.

Once removed, wrap in 6-mil plastic and seal with tape for proper disposal.

Replacement components should then be installed in accordance with standard construction practices and all applicable building and fire codes.

On site removal methods may produce large amounts of lead dust and lead residue. All on-site paint removal methods should be in accordance with the manufacturer's instructions.

The HUD Guidelines (7.3.3.1) cite several considerations when choosing off-or on-site paint removal:

- Offsite removal generally produces a better product than on-site removal.

On-site removal:

- Does not require highly skilled labor;
- Some solvent-based chemical strippers are flammable. They require ventilation and may contain toxic substances;
- Some strippers are high pH caustic strippers and may require that they be treated as a hazardous waste, regardless of the lead content;

- Heat guns generate a noxious vapor and can also pose a potential fire hazard;
- Lead residue may remain on the substrate and may be difficult to remove;
- Dry scraping generates large amounts of dust and therefore may require more extensive worker protection methods and containment and extra cleanup to achieve compliance with clearance standards.

Open flame burning should never be used under any circumstances since the high temperatures will produce high levels of airborne lead and because of the fire hazard.

Consideration should be given to using a respirator fitted with an organic vapor cartridge as well as HEPA filters when removing paint with these methods.

V. DAILY CLEAN UP

According to the HUD guidelines, “A thorough cleanup of the entire area under active removal, should occur daily during the entire process”.

Clean up should consist of the following:

Large debris

Large demolition-type debris (e.g. doors, windows, trim) should be wrapped in 6-mil plastic, sealed with tape, and moved to the area designated for trash storage on the property.

Small debris

Small debris should be swept up, collected, and disposed of properly. However, before any sweeping occurs, the affected surfaces should be sprayed with a fine mist of water to control the dust. Dry sweeping should be prohibited.
The swept debris should be placed in double 4-mil or single 6-mil plastic bags, properly sealed, and moved to a designated trash storage area.

Exterior clean

Because weather can affect the efficacy of the exterior containment, the surface plastic of the containment system should be removed at the end of each workday. The immediate area should be examined visually to ensure that no lead debris has escaped containment.

At the conclusion of the job a final cleanup must occur. This is a much more thorough process. Failure to perform an adequate final cleanup will result in failure to pass a clearance test.

VI. CONTROLLING OFF-SITE DISPOSAL

Access should be limited to:

- Contractor and employees
- Enforcement officials
- PHA or other inspectors
- Owner/owner agent

All workers on the jobsite should wear appropriate protective clothing. New shoe covers should be put on every time you enter a job site and removed and disposed of when exiting the site.

A program of ongoing cleanup should include the cleaning of all tools, equipment and worker protection gear. Daily cleaning of respirators is also required. Follow manufacturer's suggested cleaning procedures.

VII. FINAL CLEAN-UP PROCEDURES

The final clean-up procedures are as follows:

- Remove the top layer of 6-mil poly and seal in bags or clean 6-mil poly.
- Remove bags of poly and store in a secure area.
- Vacuum all surfaces with a HEPA-equipped vacuum beginning with the ceiling and working down.
- Wash all surfaces with TSP detergent.
- Vacuum all surfaces a second time.
- Remove all contaminated equipment and material to a secure storage area.
- Remove final layer of poly.
- Vacuum floors with HEPA-equipped vacuums.
- Wash surfaces again with TSP.
- Vacuum again.
- Seal surfaces with paint, polyurethane or wax.

Preliminary Final Cleanup

Before final cleanup and surfaces can be painted or sealed, plastic sheeting used for containment must be removed. Removal should start with upper-level plastic. Plastic should first be sprayed or misted with water to hold down the dust. It should be folded carefully from the corners/ends to the middle to trap any remaining lead dust and placed into double 4-mil or single 6-mil plastic bags that are then sealed and removed from the premises.

After the plastic has been removed the entire area should be HEPA-vacuumed as detailed in the HUD guidelines Section 10.2.1. Start with the farthest room to omit tracking dust through already cleaned areas. In each room, vacuuming should begin with the ceiling and proceed down the walls, making sure every surface is

treated, including doors and door trim, windows, window sills, wells, and trim baseboards, etc.

The entire affected area should next be washed down with a TSP solution as detailed previously and then it should be HEPA-vacuumed again using the steps already outlined. The contractor must not deviate from or skip any steps. To do so could mean that hazardous levels of lead dust and residue could be embedded in the new paint and mobilized later when that paint deteriorates or is abraded.

Final cleanup

After painting/sealing is complete, the final clean up can take place. The recommended method for the entire affected area is as follows:

- First, it should be HEPA-vacuumed again.
- Second, it should be washed down with TSP solution again.
- Finally, it should be HEPA-vacuumed again.

Wall and ceiling surfaces newly painted with latex paint are exempted from the final wash due to the danger of staining or otherwise damaging the final painted surface, but should be HEPA-vacuumed again.

NOTES

NOTES

Section 21 – Standard Drawings

Retaining Walls	page 52 - 53
Foundation Walls	page 54 - 55
Garage Separation Wall	page 56
Framing Details	page 57- 61
Stairs, Guards, Handrails	page 62 - 63
Built up Roofing Detail, Roofing	page 64 - 65
Heating and Ventilation	page 66 - 70
Service Clearances (Gas and Electric)	page 71
Shower Details	page 72 - 73
Water Heater	page 74– 76
Electrical Calculation	page 77 - 78

RETAINING WALLS

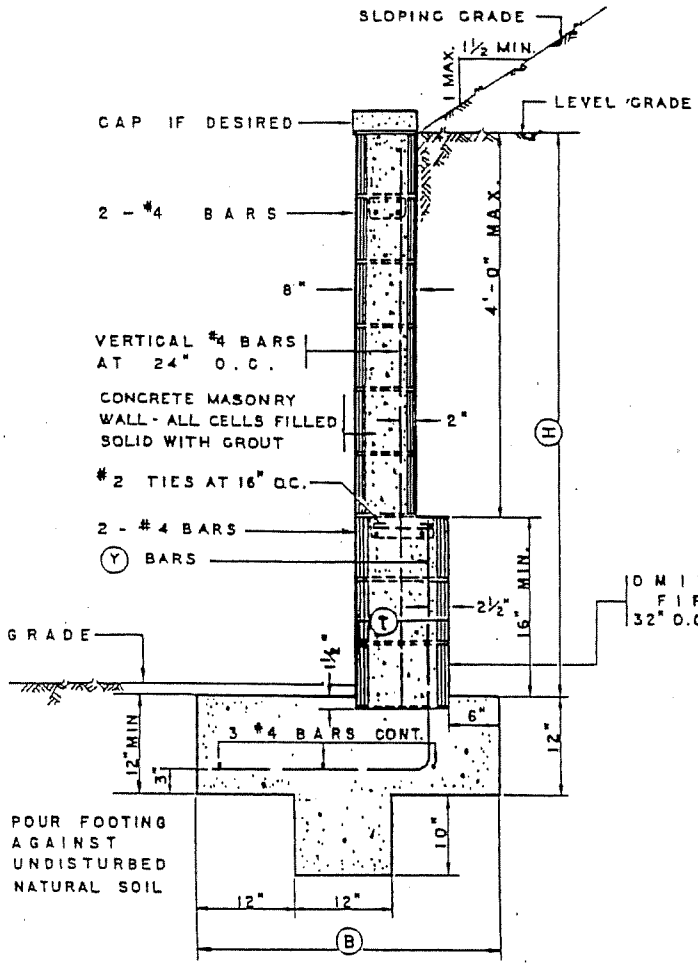

Typical section over 5'-0"
½" = 1'-0"

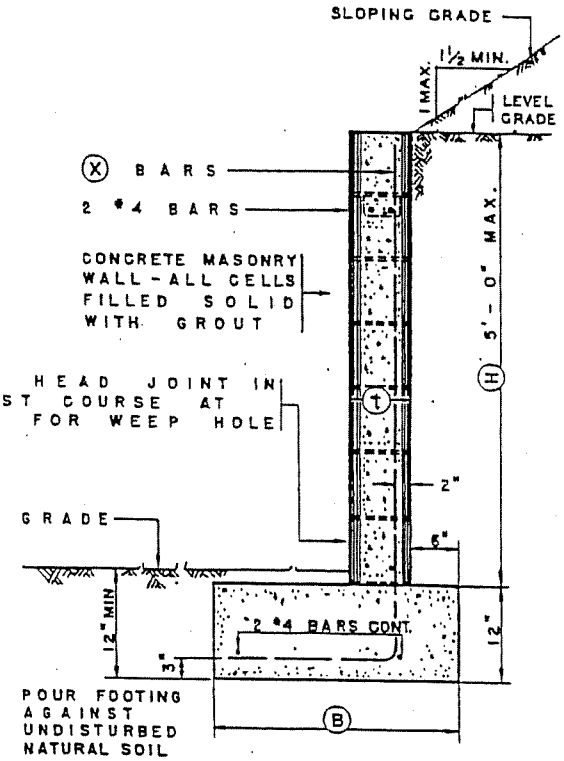

Typical section 5'-0" max.
½" = 1'-0"

H	t	B	X BARS	Y BARS
3'	6"	1'-9"	#3 AT 32" O.C.	——
4'	8"	2'-2"	#4 AT 48" O.C.	——
5'	8"	2'-9"	#4 AT 24" O.C.	——
6'	12"	3'-3"	——	#4 AT 24" O.C.
7'	12"	3'-10"	——	#4 AT 16" O.C.
8'	12"	4'-6"	——	#5 AT 16" O.C.

Design for **level grade** above wall

H	t	B	X BARS	Y BARS
3'	6"	2'-3"	#3 AT 24" O.C.	——
4'	8"	3'-0"	#4 AT 24" O.C.	——
5'	8"	3'-6"	#5 AT 16" O.C.	——
6'	12"	4'-0"	——	#5 AT 24" O.C.
7'	12"	4'-9"	——	#6 AT 16" O.C.
8'	12"	5'-6"	——	#7 AT 16" O.C.

Design for **sloping grade** above wall

NOTE - CONCRETE IN FOOTING TO TEST 2,000 LBS. PER SQ. IN. AT 28 DAYS
CONCRETE BLOCK - GRADE "A" UNITS A.S.T.M. C-90
GROUT - 1 PART CEMENT, 3 PARTS SAND, 2 PARTS PEA GRAVEL
MORTAR - 1 PART CEMENT, ½ PART LIME PUTTY, 4½ PARTS SAND

MAXIMUM STRESSES

f_s = 18,000 P.S.I.
f_m = 225 P.S.I.
SHEAR V = 15 P.S.I.
BOND U = 100 P.S.I.
SOIL PRESSURE = 1,000 LBS. PER SQ. FT.
CONCRETE TO SOIL FRICTION COEFFICIENT = 0.4

STANDARD 3' RETAINING WALL

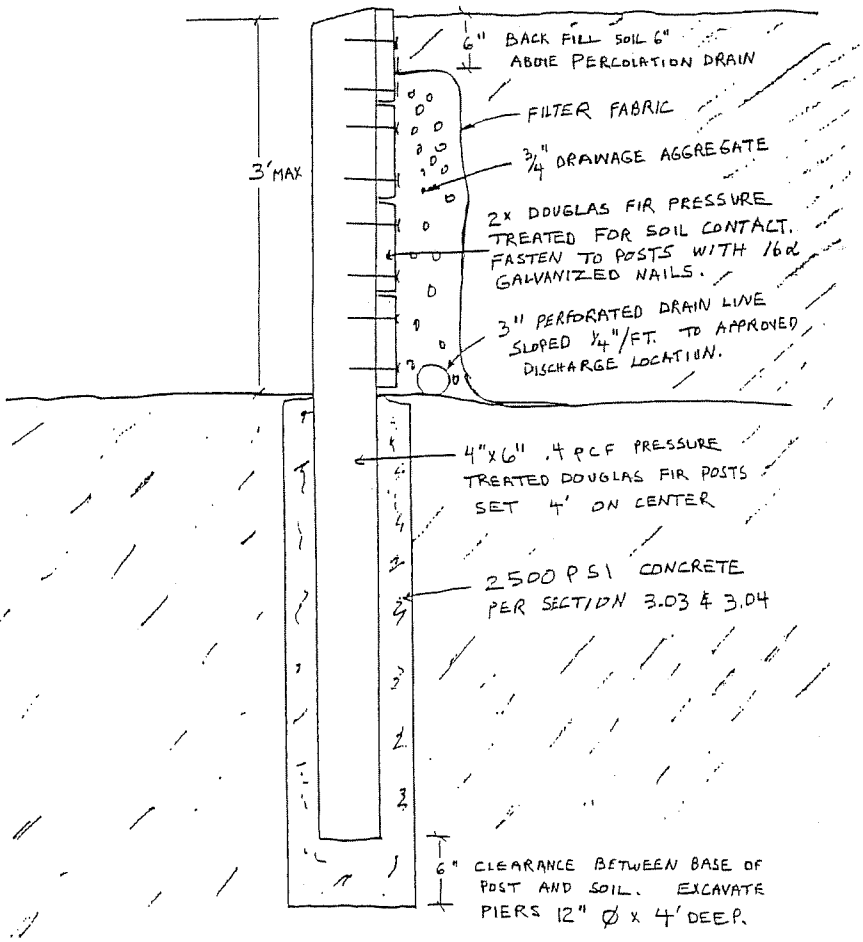

COMBINATION RETAINING WALL & FENCE

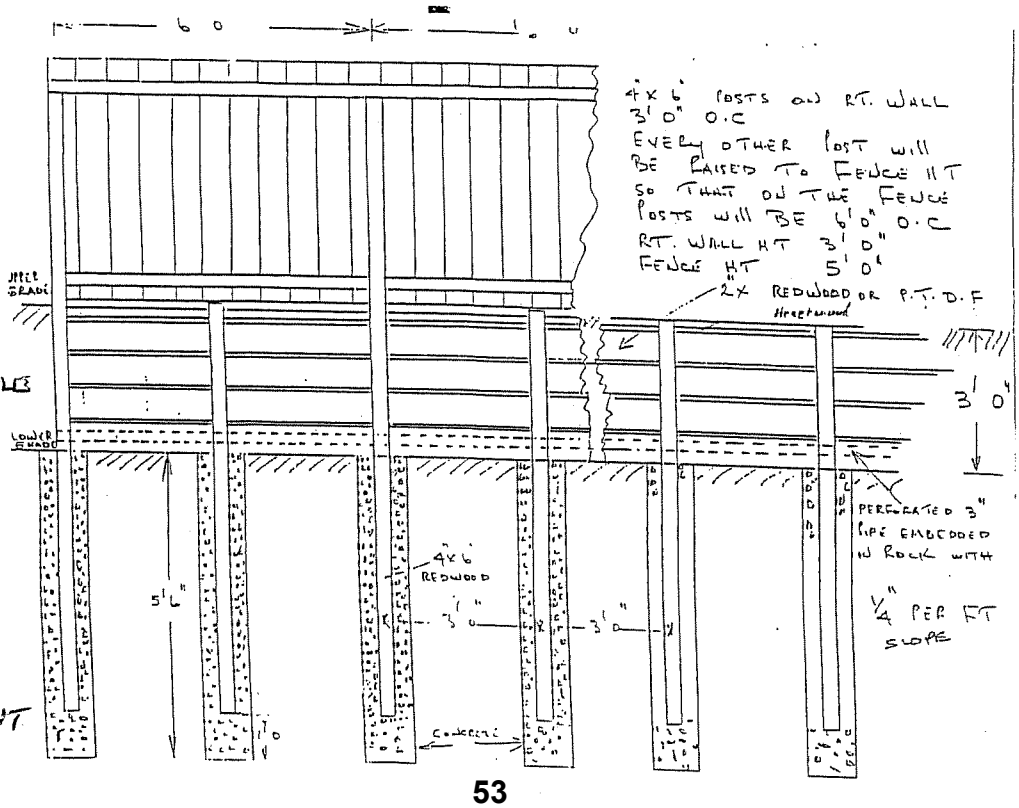

12" PIER HOLES 5'6" DEEP 3' O.C

PIERS MAY BE 4' O.C FOR 3' HIGH RETAINING WALL WITHOUT FENCE

Monolithic Slab with Footings

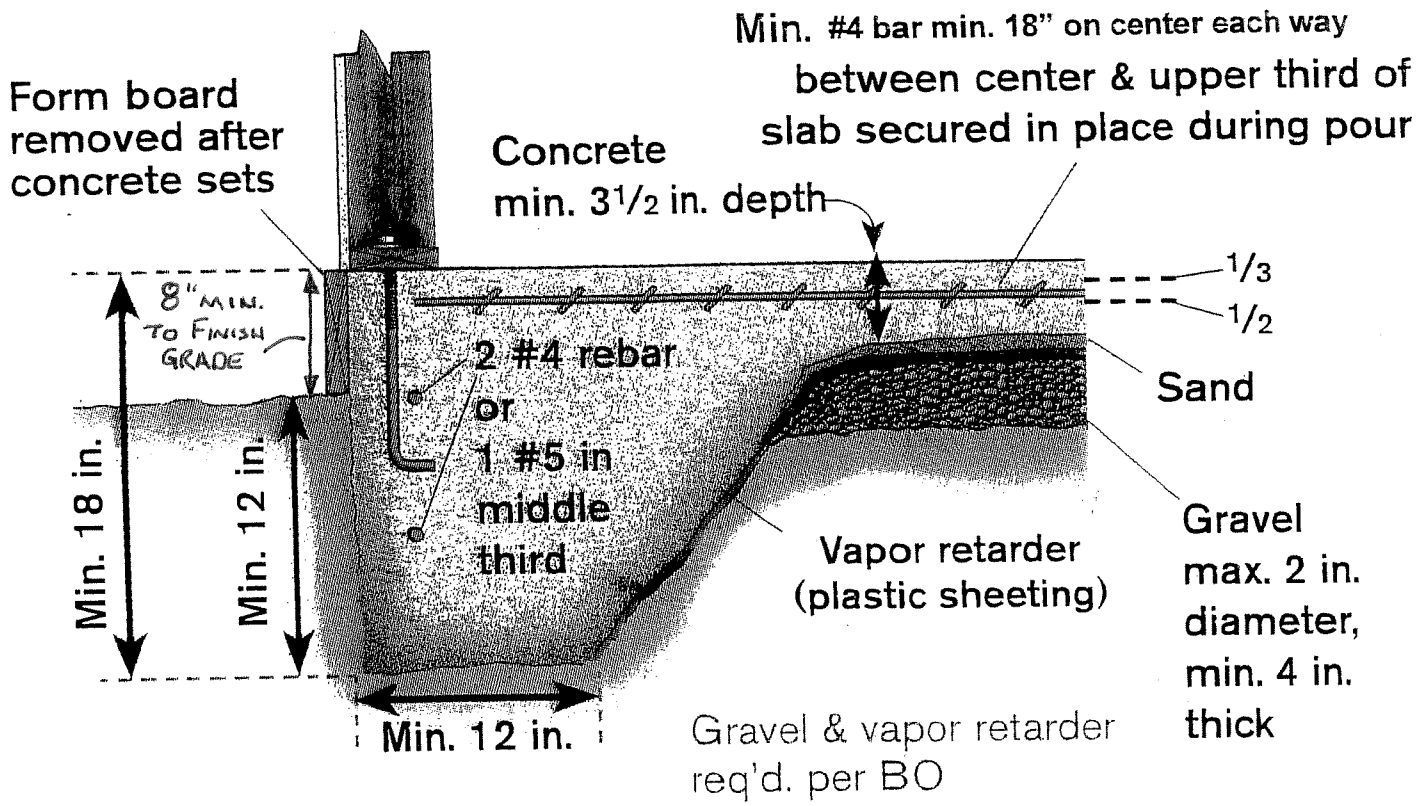

Underfloor Clearance

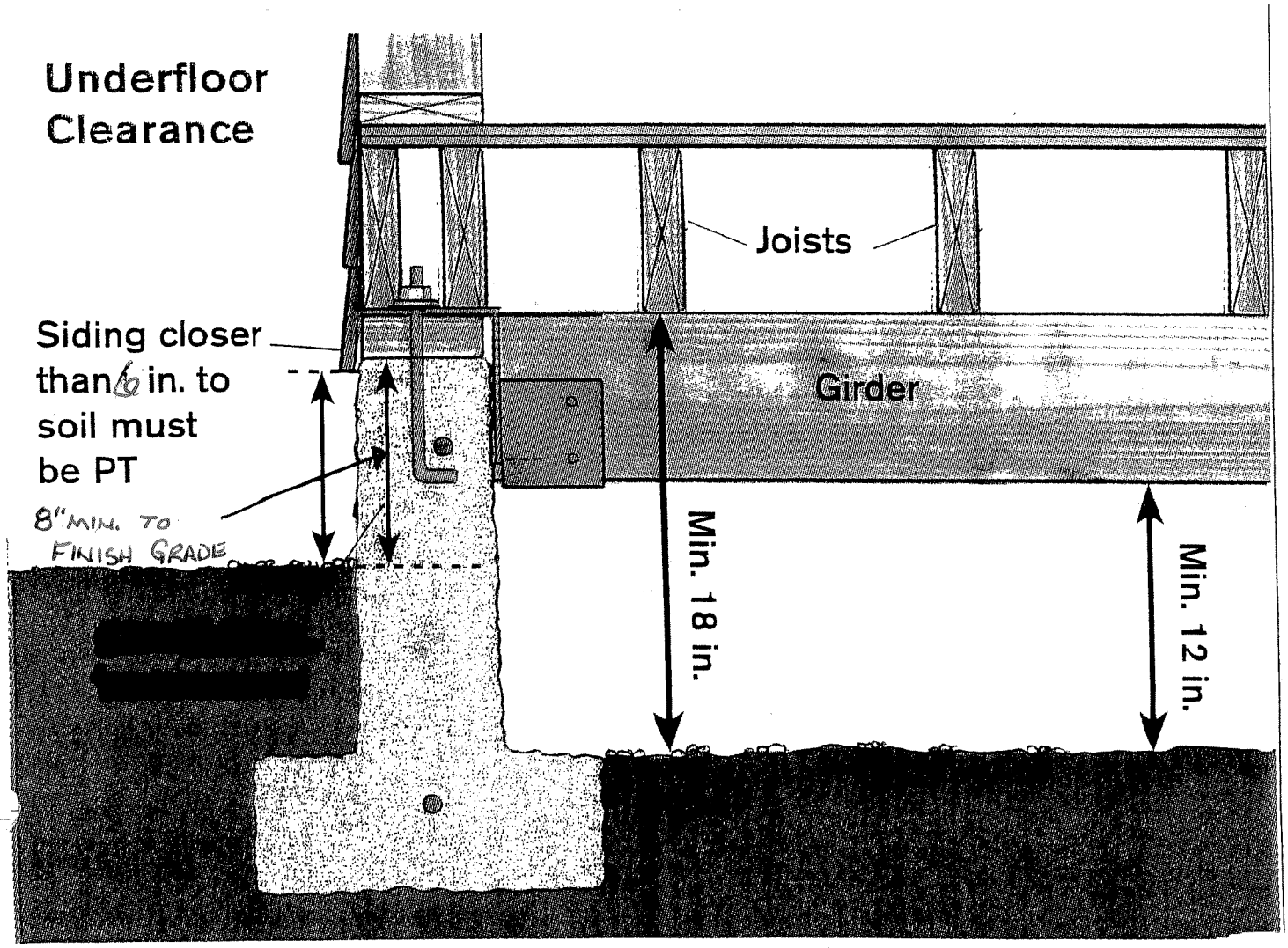

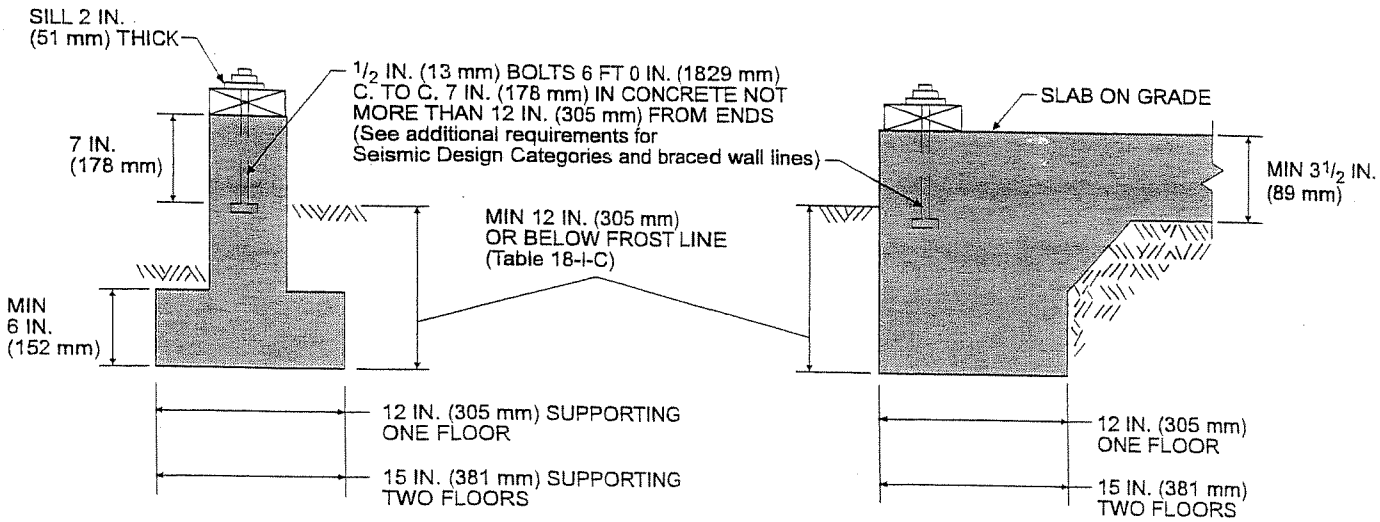

For SI: 1 inch = 25.4 mm.

FIGURE 4—CONCRETE FOUNDATION DETAILS

TABLE 1805.4.2
FOOTINGS SUPPORTING WALLS OF LIGHT-FRAME CONSTRUCTION[a, b, c, d, e]

NUMBER OF FLOORS SUPPORTED BY THE FOOTING[f]	WIDTH OF FOOTING (inches)	THICKNESS OF FOOTING (inches)
1	12	6
2	15	6
3	18	8[g]

For SI: 1 inch = 25.4 mm, 1 foot = 304.8 mm.

a. Depth of footings shall be in accordance with Section 1805.2.
b. The ground under the floor is permitted to be excavated to the elevation of the top of the footing.
c. Interior-stud-bearing walls are permitted to be supported by isolated footings. The footing width and length shall be twice the width shown in this table, and footings shall be spaced not more than 6 feet on center.
d. See Section 1908 for additional requirements for footings of structures assigned to Seismic Design Category C, D, E or F.
e. For thickness of foundation walls, see Section 1805.5.
f. Footings are permitted to support a roof in addition to the stipulated number of floors. Footings supporting roof only shall be as required for supporting one floor.
g. Plain concrete footings for Group R-3 occupancies are permitted to be 6 inches thick.

Required separation from garage and dwelling

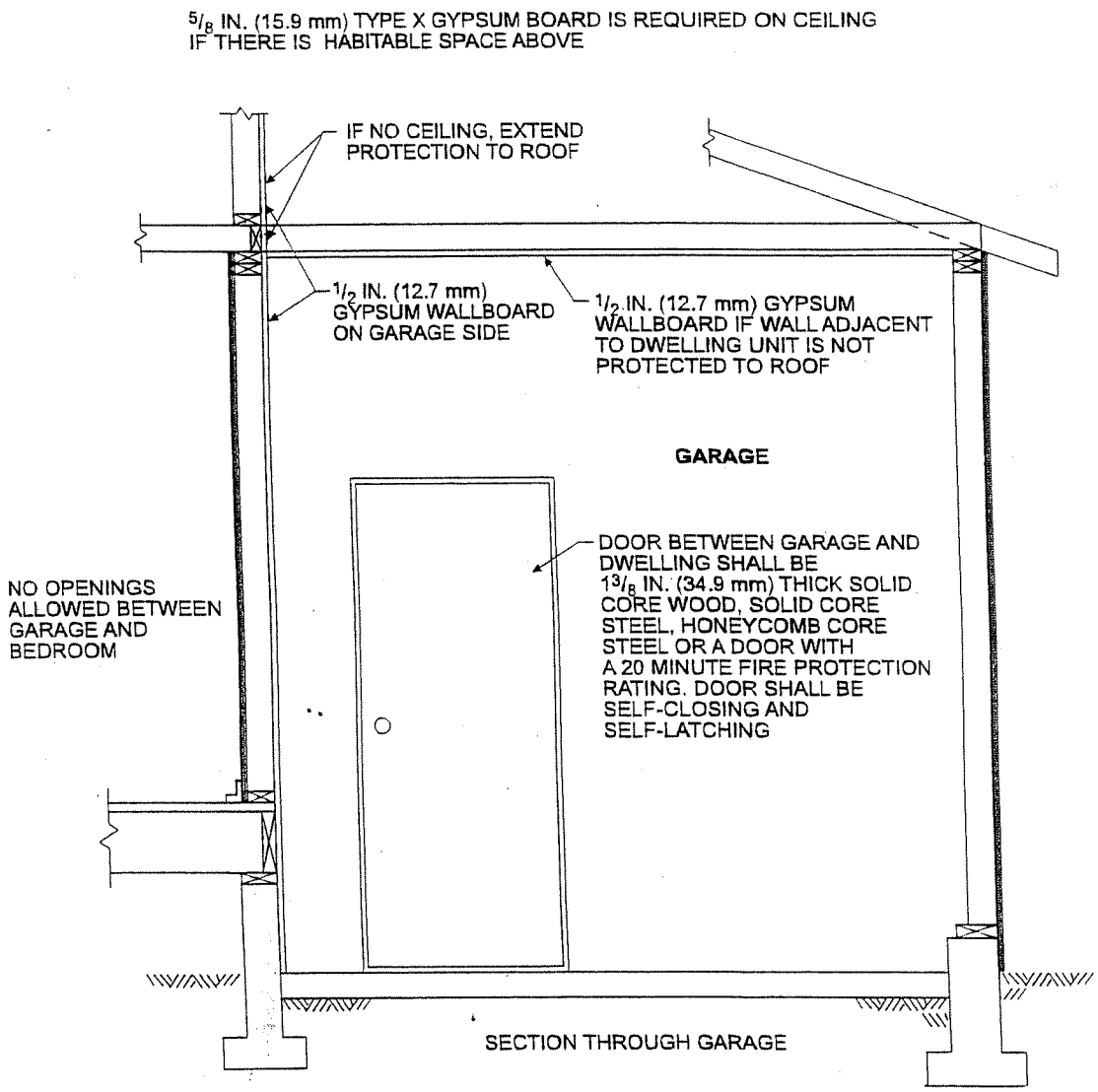

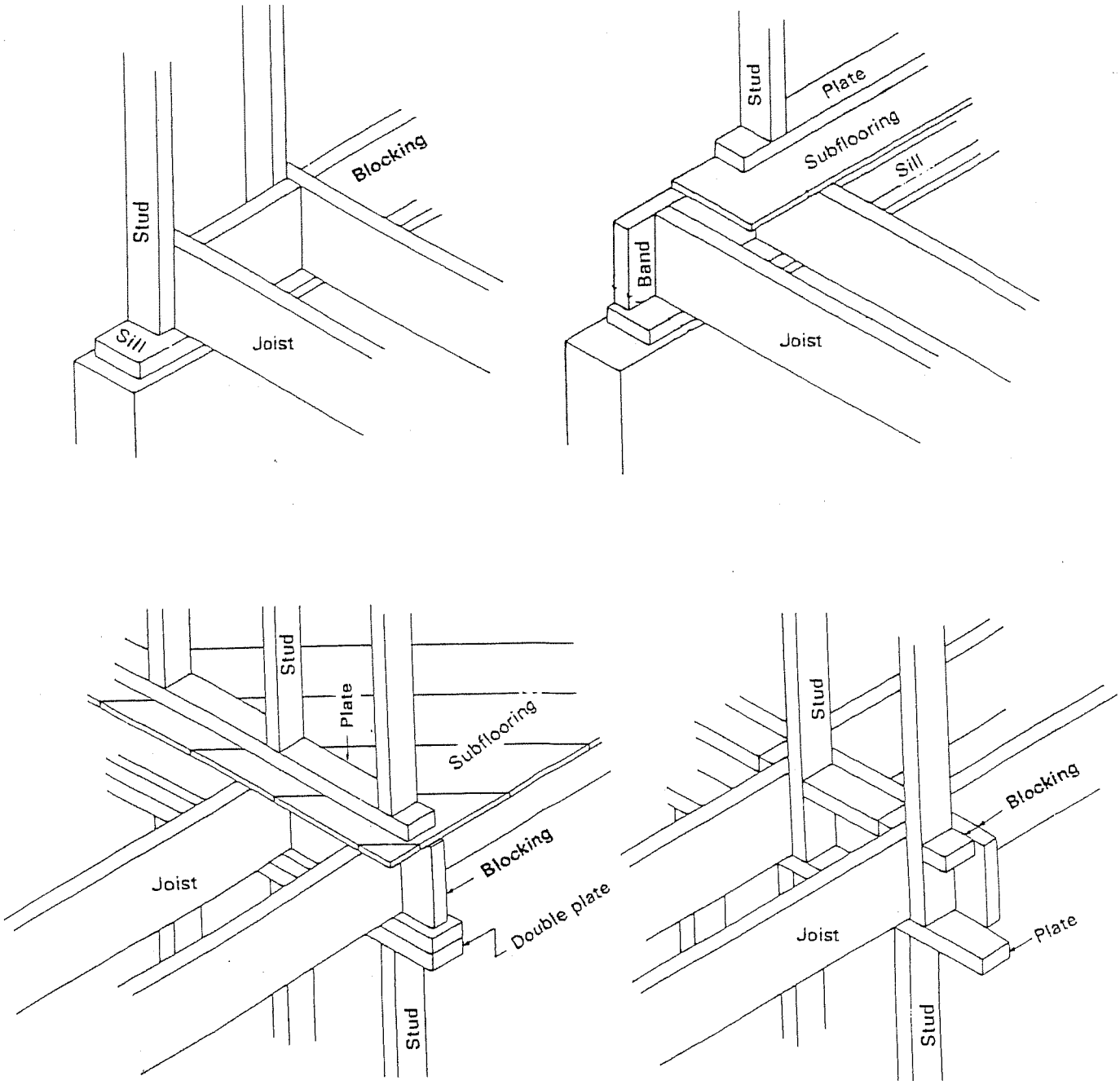

Source NFPA

— Blocking of Joists

In addition to the lateral support at the ends, joists may also be required to have intermediate support at intervals not exceeding 10 feet when such members have a depth-to-thickness ratio exceeding 6:1 based upon nominal dimensions. Intermediate blocking is not required for joists 2 inches by 12 inches or smaller. Such intermediate lateral support may be provided by solid blocking, diagonal bridging or wood bridging not less than 1-inch by 3-inch in nominal size nailed to the bottom of the joist. Figure No. 602.4B illustrates the various alternatives for intermediate lateral support.

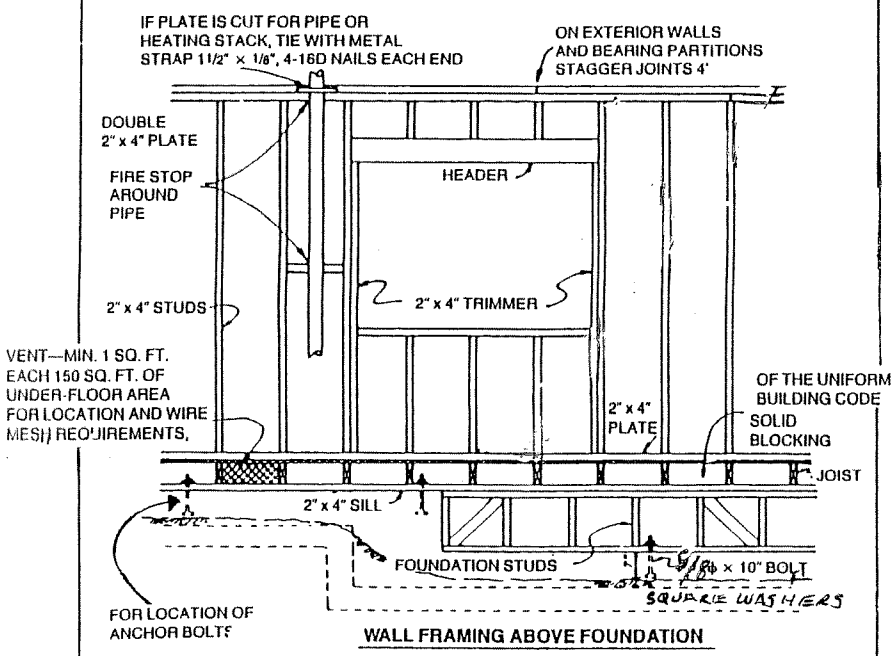

WALL FRAMING ABOVE FOUNDATION

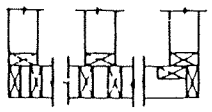

CORNER STUDS

WALL FRAMING DETAIL

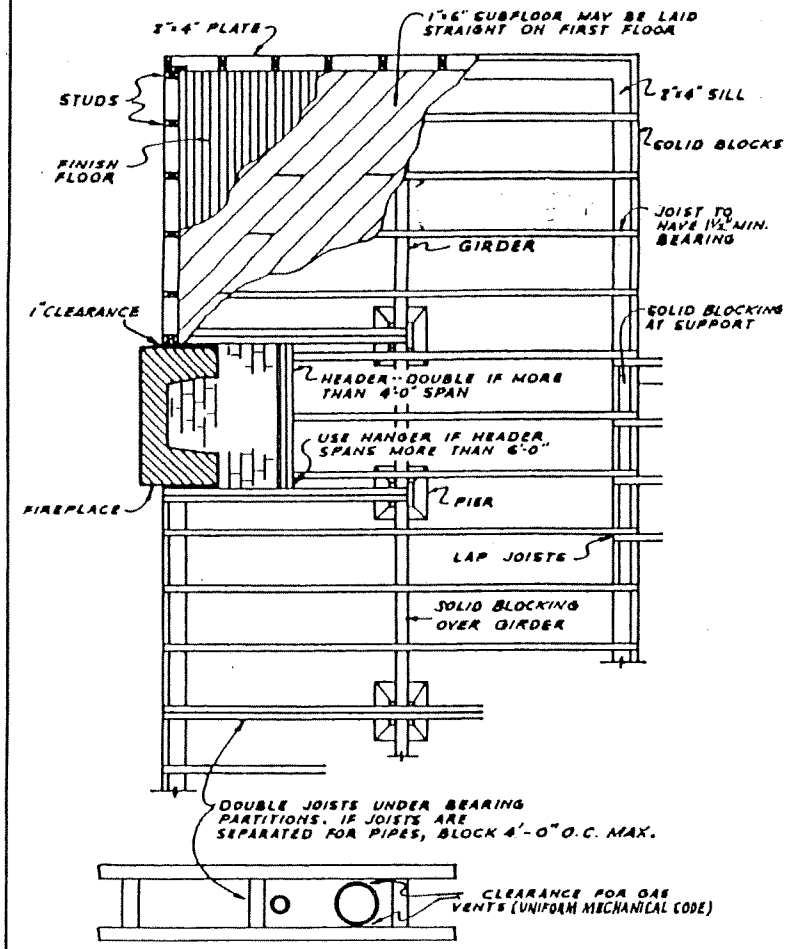

FLOOR CONSTRUCTION DETAIL

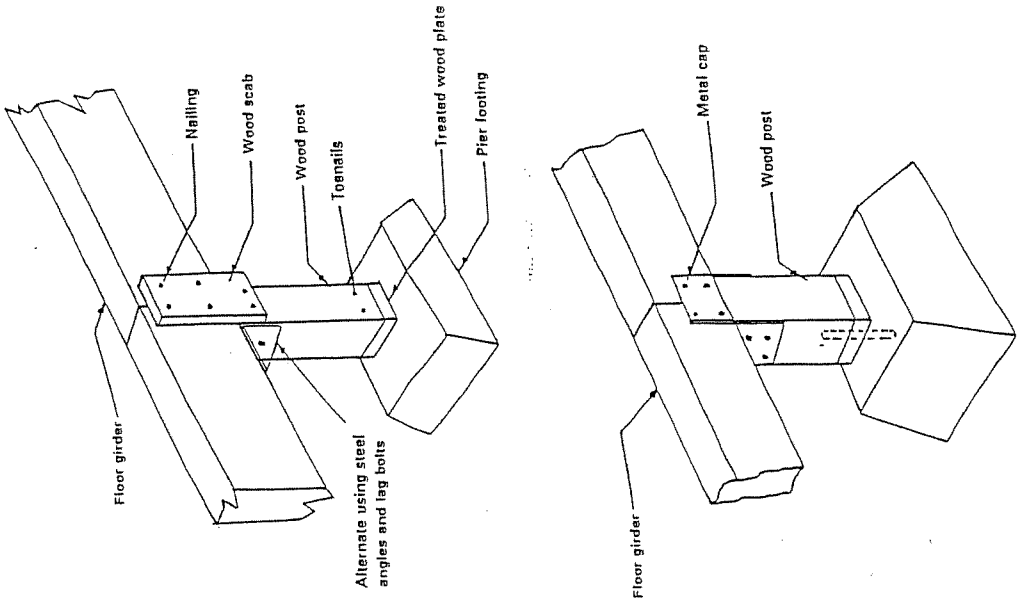

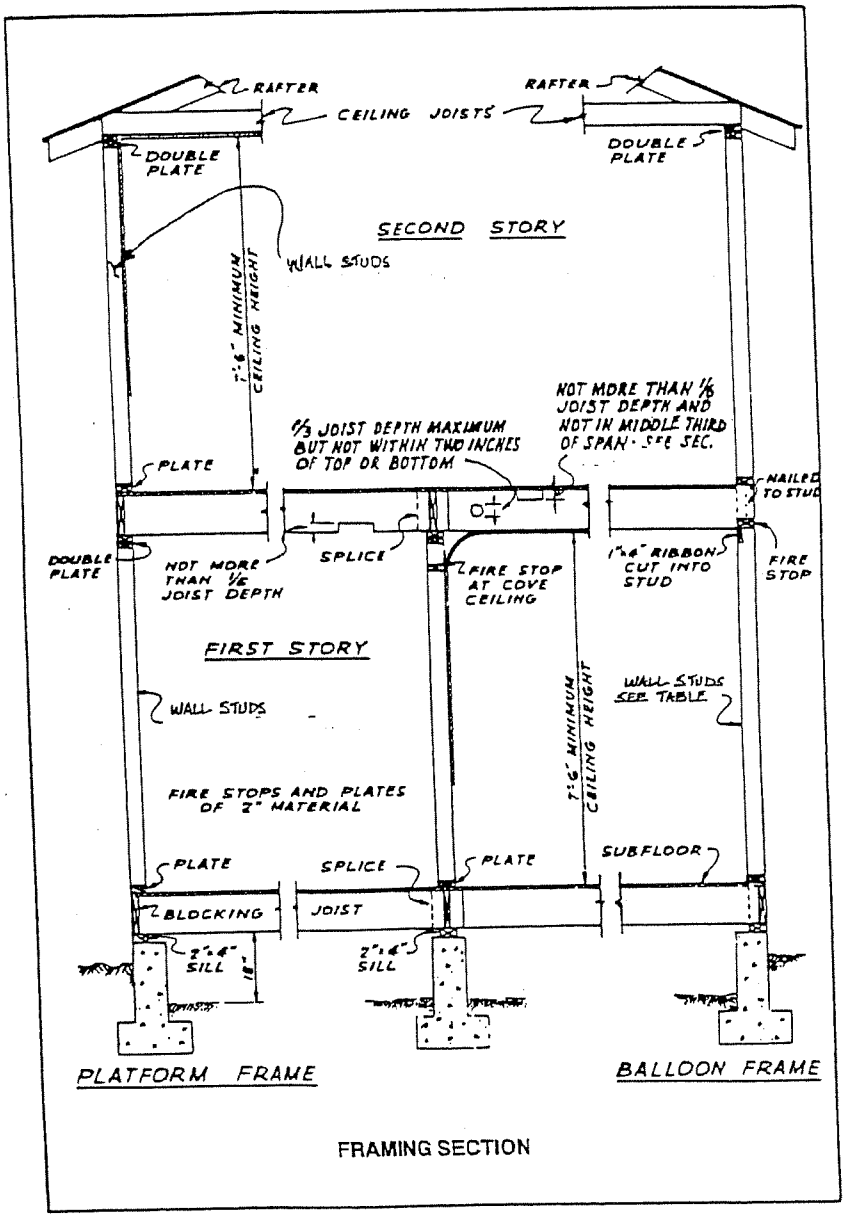

FRAMING SECTION

GRADE [illegible] - MIN 6"x13" ONE BAR TOP & BOTTOM.
PIERS - 1 STORY 5' MAX APART - 2 STORY 4' MAX APART.

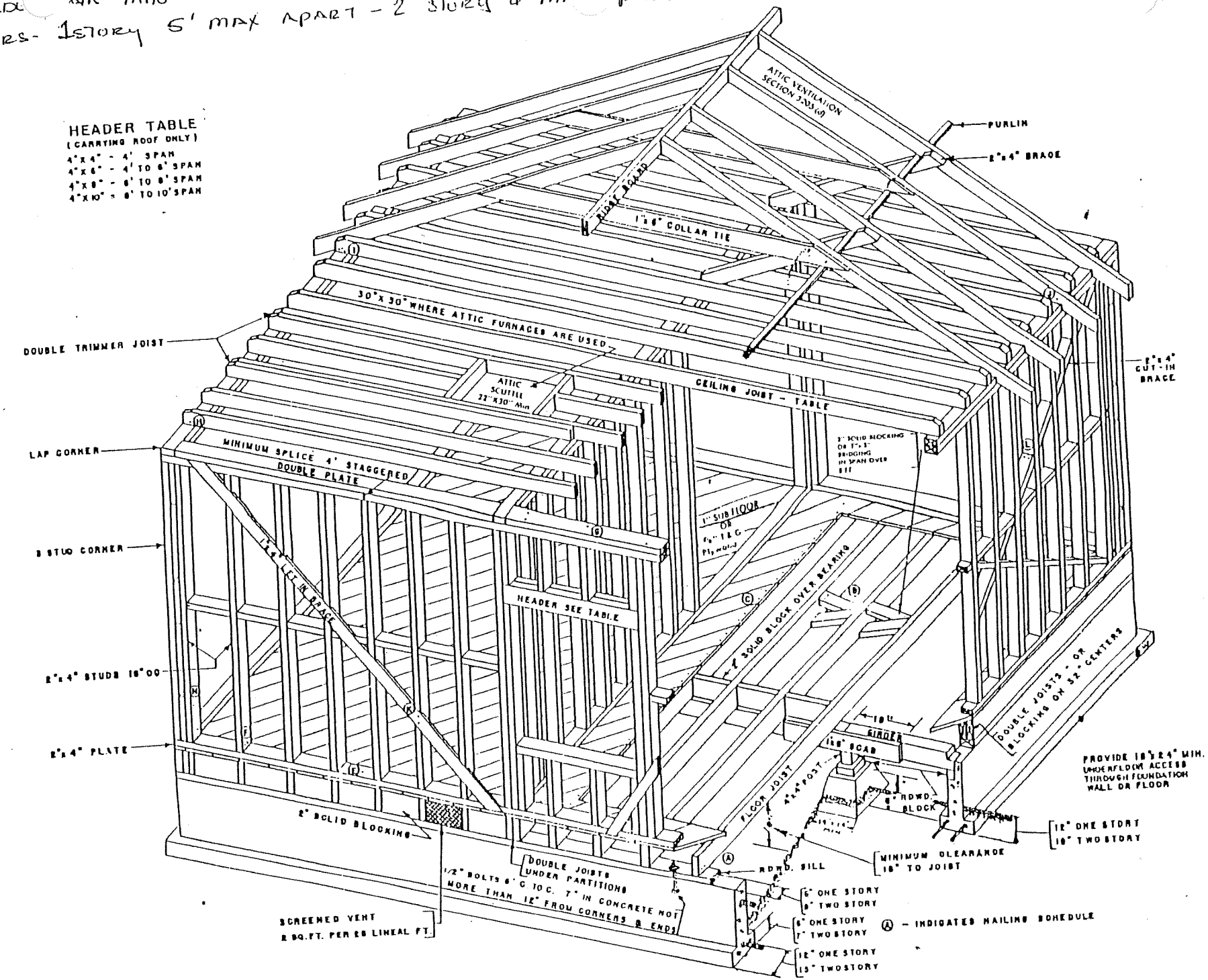

FIGURE 5

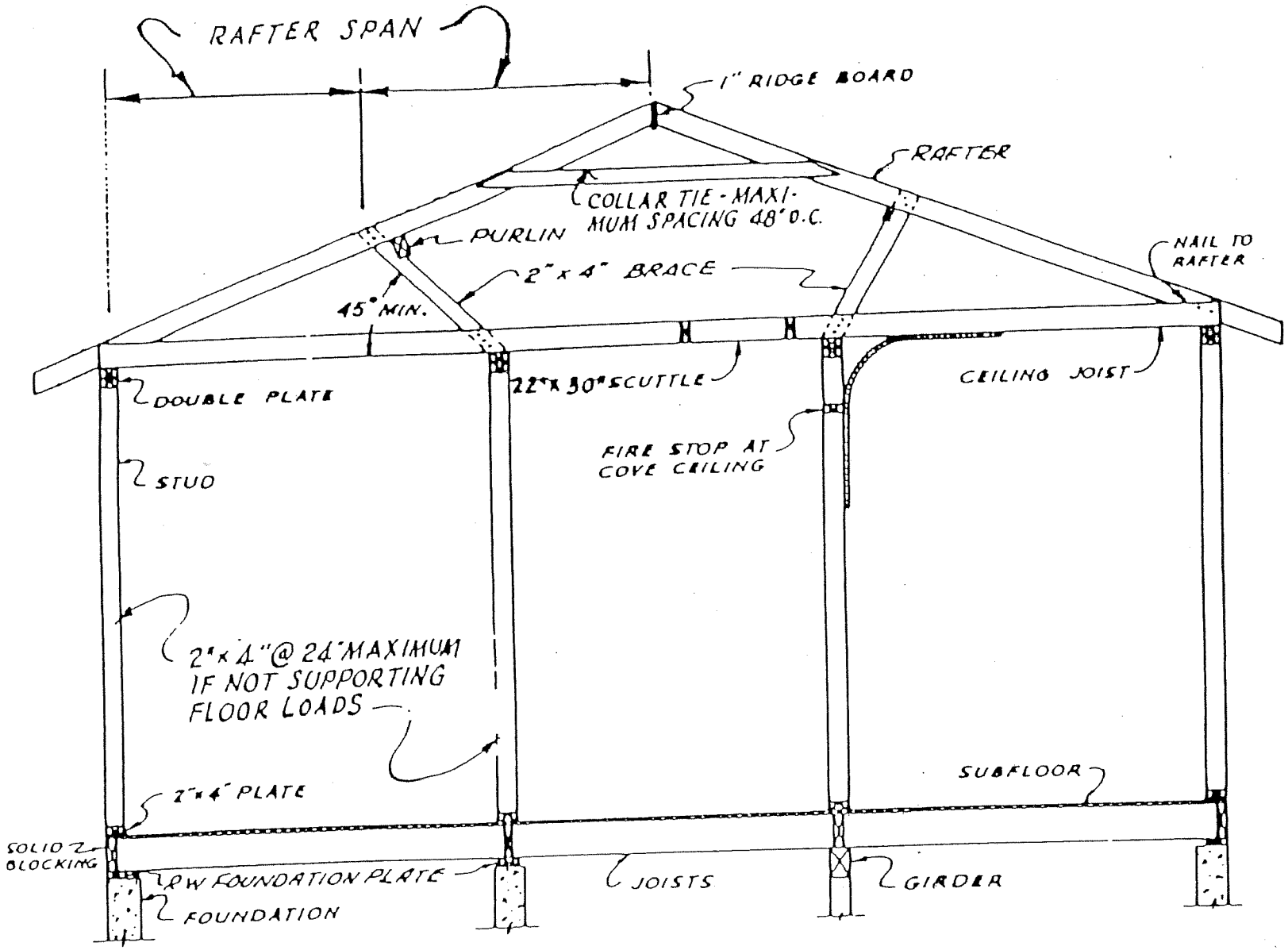
RAFTER SPAN
1" RIDGE BOARD
RAFTER
COLLAR TIE - MAXIMUM SPACING 48" O.C.
PURLIN
NAIL TO RAFTER
2" x 4" BRACE
45° MIN.
DOUBLE PLATE
22" x 30" SCUTTLE
CEILING JOIST
FIRE STOP AT COVE CEILING
STUD
2" x 4" @ 24" MAXIMUM IF NOT SUPPORTING FLOOR LOADS
SUBFLOOR
2" x 4" PLATE
SOLID BLOCKING
RW FOUNDATION PLATE
JOISTS
GIRDER
FOUNDATION

RAMING

Stair Treads and Risers

2007 CBC – Section 1009.3

- The minimum tread depth equals 10 inches (254 mm).
- The maximum riser height equals 7¾ inches (197 mm).
- A minimum 10-inch (254 mm) winder tread depth is measured at the 12-inch (254 mm) walk line.
- A nosing not less than 0.75 inch (19 mm) but not more than 1.25 inches (31.75 mm) shall be provided on stairways with solid risers where the tread depth is less than 11 inches (279 mm).
- There are stair tread profile requirements.

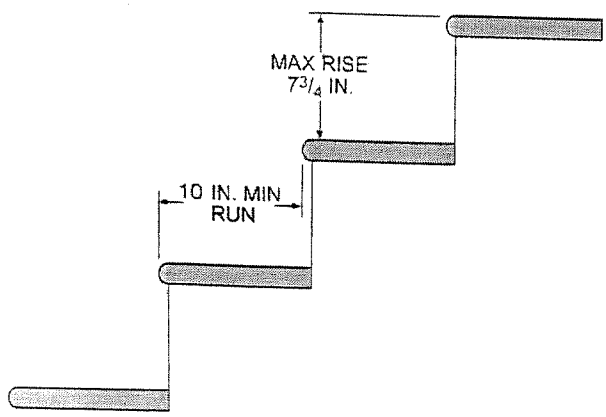

For SI: 1 inch = 25.4 mm, 1 foot =304.8mm

Figure 11
STAIR TREAD AND RISER

- HCD and SFM have amended the CBC to include critical elements of the IRC this amendment allows in Group R-3 occupancies, a floor or landing is not required at the top of an interior flight of stairs, including stairs in an enclosed garage, provided a door does not swing over the stairs. Additionally this amendment was allowed in the 2001 CBC and was brought forward.

Guards

2007 CBC – Section 1013

- Height in all occupancies is to be a minimum of 42 inches (1067 mm).
- A handrail at 34 inches to 38 inches (864 mm to 965 mm) along stairs is permitted to be used as a guard.
- A 43/8- inch (111 mm) sphere limitation is permitted at the open sides of the stairs.
- Escape and Rescue Openings

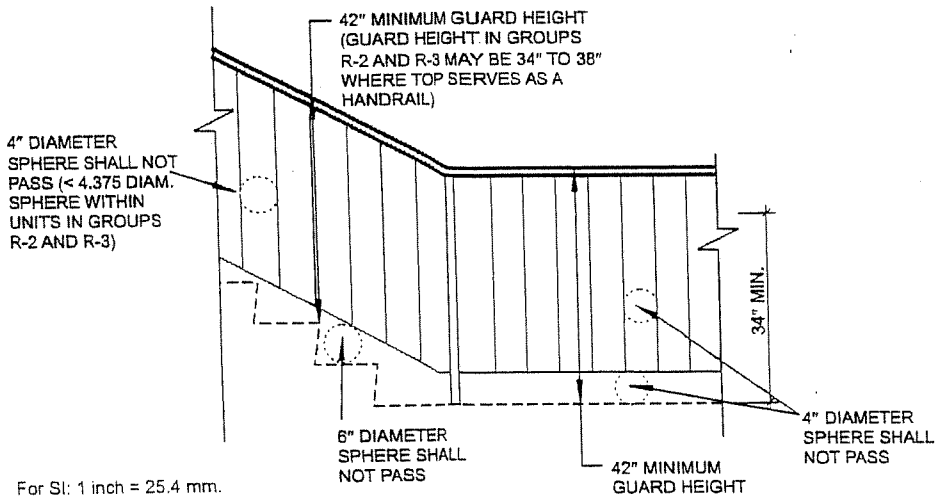

Figure 14
GUARD

Handrails

2007 CBC – Sections 1009.10 and 1012

- Handrails are required on stairways having 2 or more risers.
- HCD and SFM amendment: "In Group R-3 occupancies, a continuous run of treads or flight of stairs with fewer than four risers does not require handrails."
- Handrails are permitted on only one side.
- Handrails with a circular cross-section shall have an outside diameter of at least 1.25 inches (32 mm) and not greater than 2 inches (51 mm), or shall provide equivalent graspability.
- If the handrail is not circular, it shall have a perimeter dimension of at least 4 inches (102 mm) and not greater than 6.25 inches (158 mm) with a maximum cross-section dimension of 2.25 inches (57 mm).
- A vertical 2 by 6 handrail is not permitted.

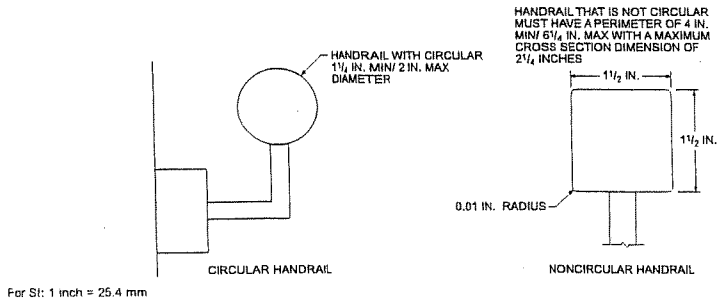

Figure 13
HANDRAILS

TYPICAL DETAIL OF BUILT-UP ROOFING

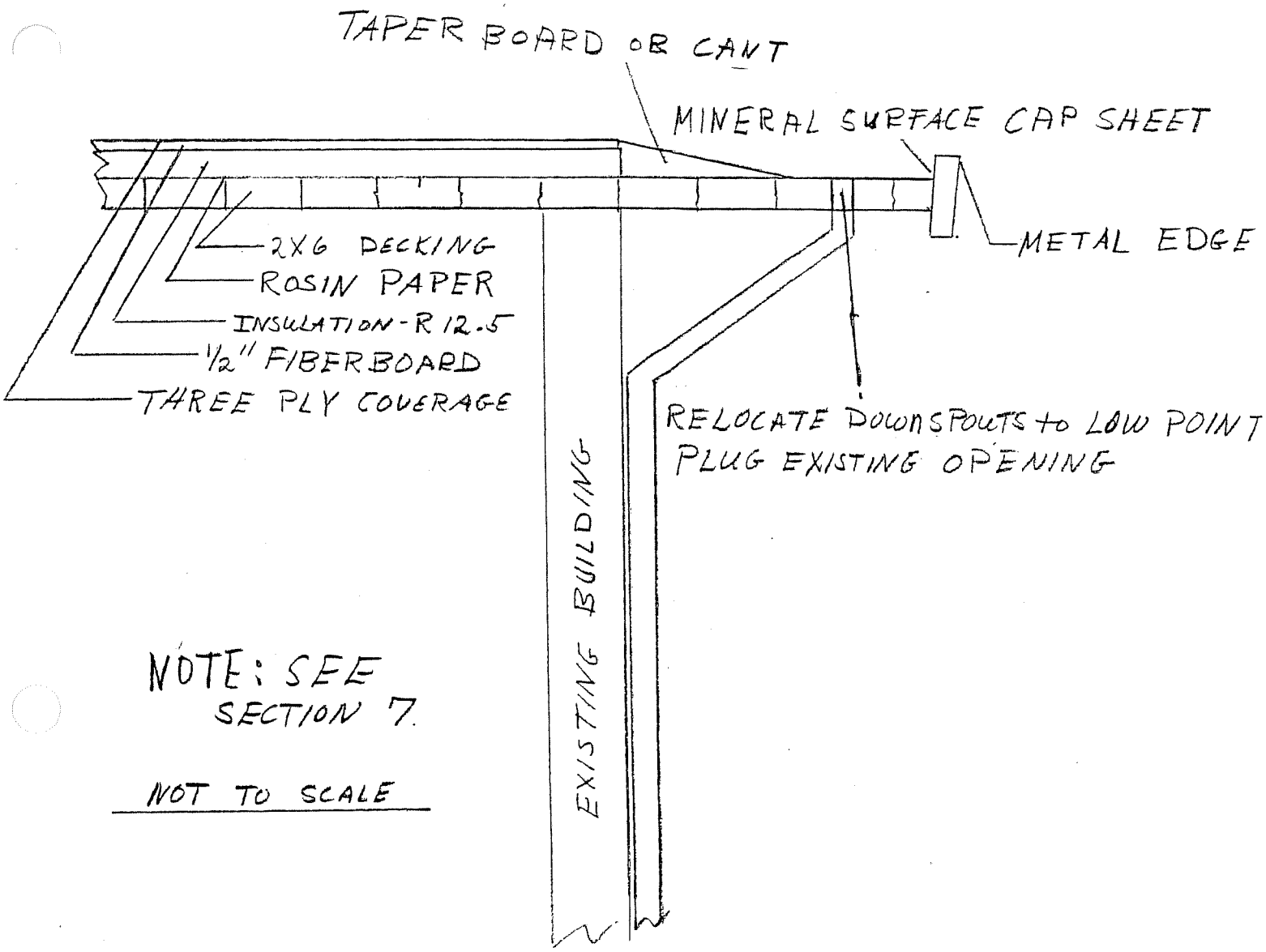

NOTE: SEE SECTION 7.

NOT TO SCALE

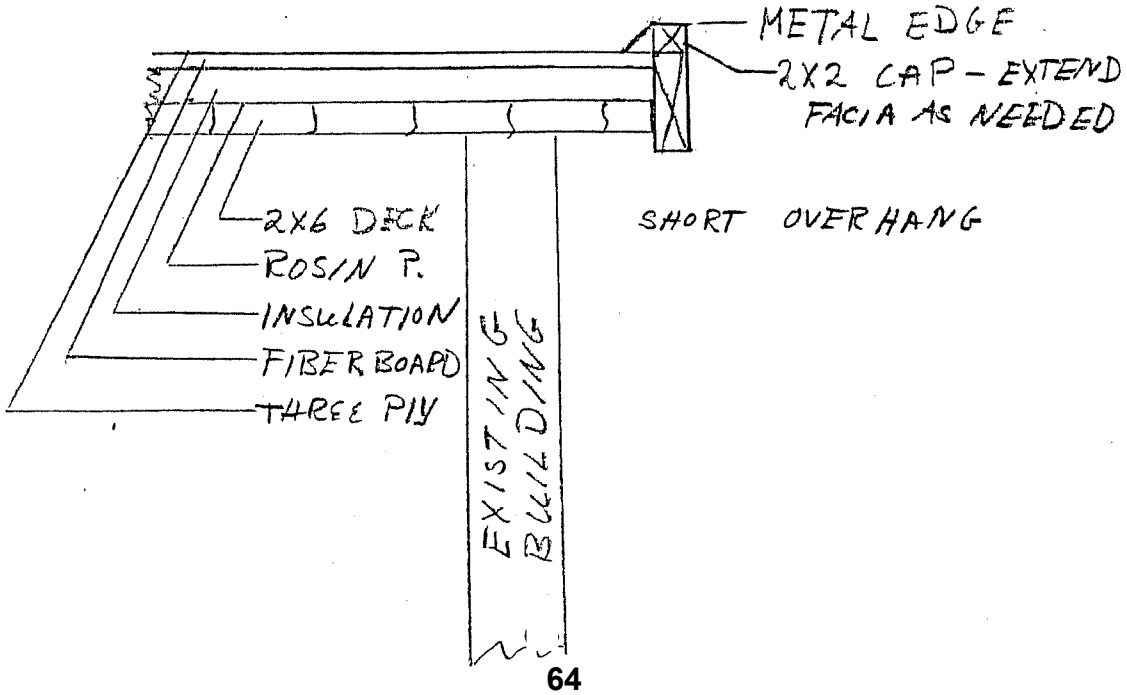

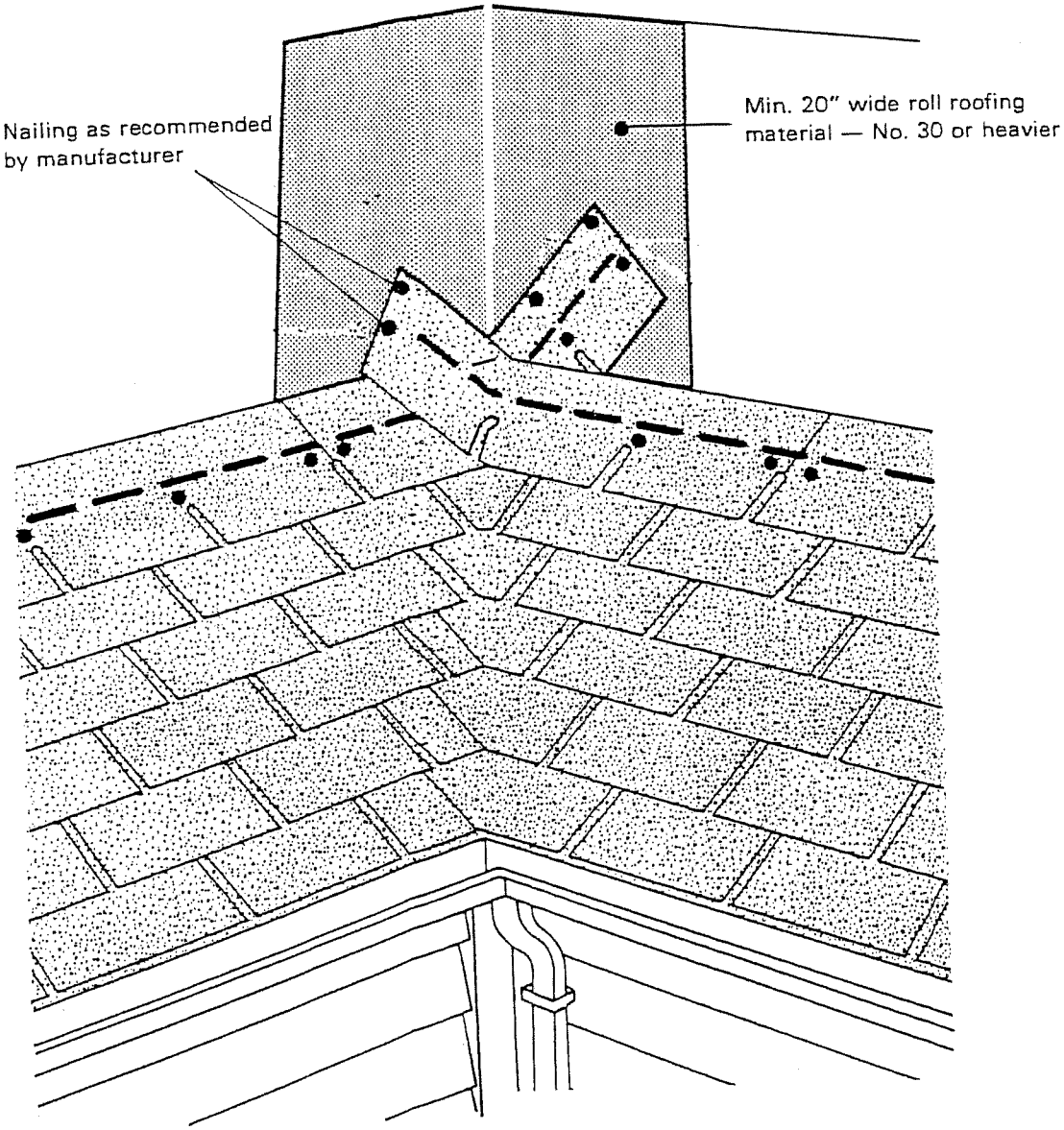
Nailing as recommended by manufacturer
Min. 20" wide roll roofing material — No. 30 or heavier

Source NRCA

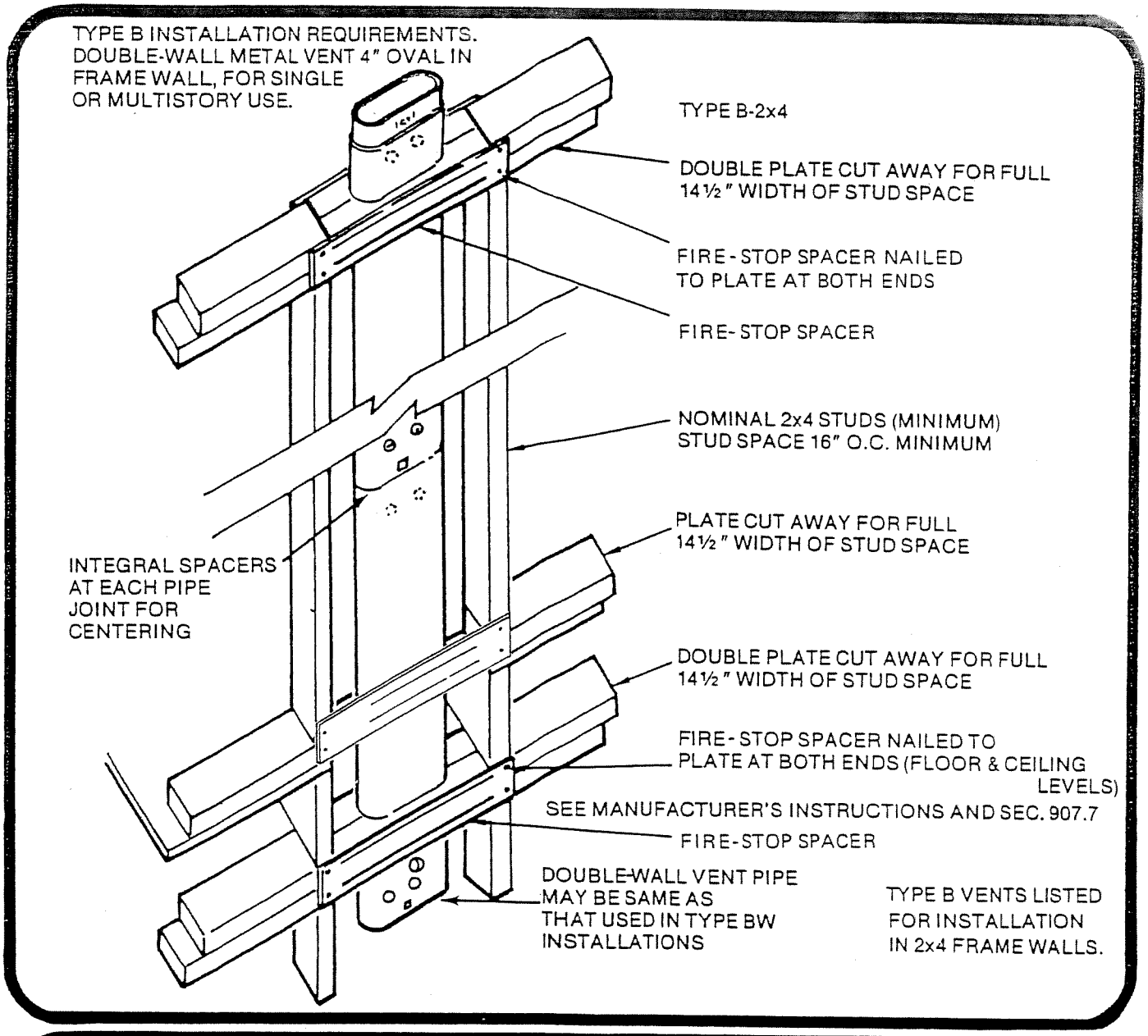
TYPE B INSTALLATION REQUIREMENTS. DOUBLE-WALL METAL VENT 4" OVAL IN FRAME WALL, FOR SINGLE OR MULTISTORY USE.
TYPE B-2x4
DOUBLE PLATE CUT AWAY FOR FULL 14½" WIDTH OF STUD SPACE
FIRE-STOP SPACER NAILED TO PLATE AT BOTH ENDS
FIRE-STOP SPACER
NOMINAL 2x4 STUDS (MINIMUM) STUD SPACE 16" O.C. MINIMUM
PLATE CUT AWAY FOR FULL 14½" WIDTH OF STUD SPACE
INTEGRAL SPACERS AT EACH PIPE JOINT FOR CENTERING
DOUBLE PLATE CUT AWAY FOR FULL 14½" WIDTH OF STUD SPACE
FIRE-STOP SPACER NAILED TO PLATE AT BOTH ENDS (FLOOR & CEILING LEVELS)
SEE MANUFACTURER'S INSTRUCTIONS AND SEC. 907.7
FIRE-STOP SPACER
DOUBLE-WALL VENT PIPE MAY BE SAME AS THAT USED IN TYPE BW INSTALLATIONS
TYPE B VENTS LISTED FOR INSTALLATION IN 2x4 FRAME WALLS.

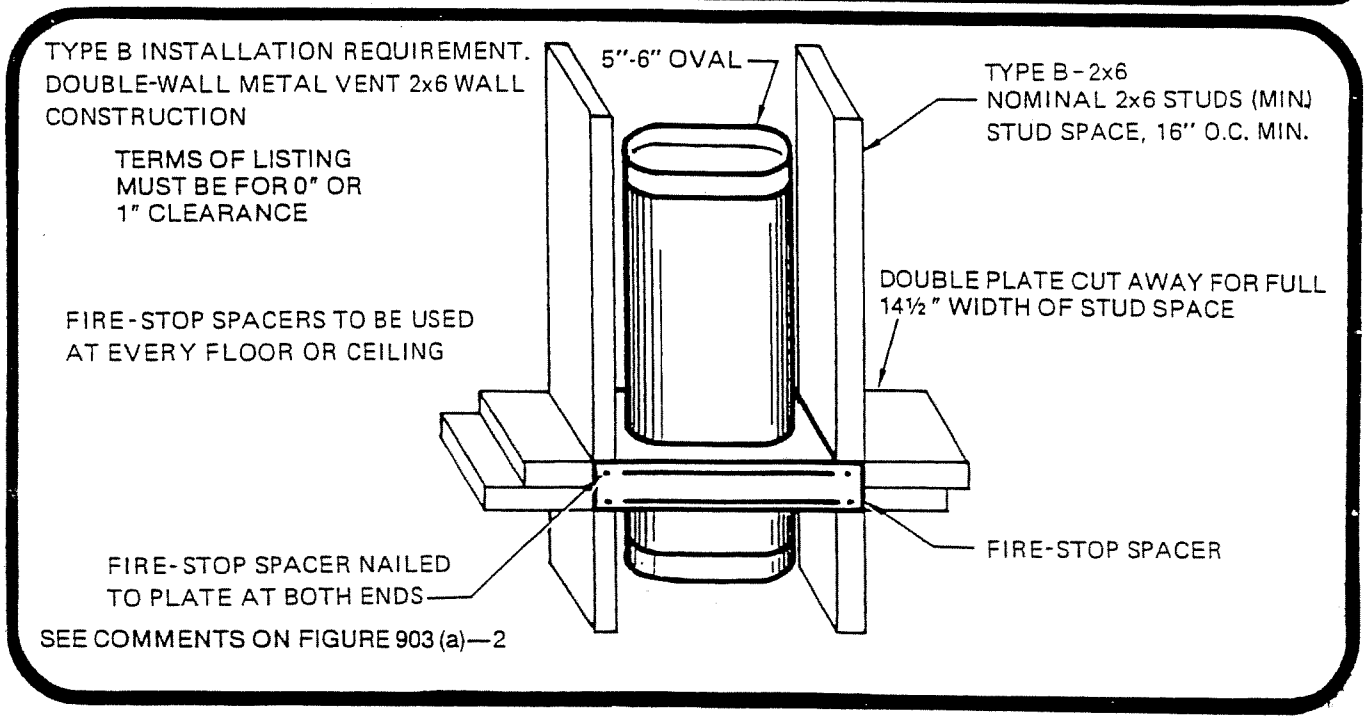
TYPE B INSTALLATION REQUIREMENT. DOUBLE-WALL METAL VENT 2x6 WALL CONSTRUCTION
TERMS OF LISTING MUST BE FOR 0" OR 1" CLEARANCE
FIRE-STOP SPACERS TO BE USED AT EVERY FLOOR OR CEILING
FIRE-STOP SPACER NAILED TO PLATE AT BOTH ENDS
SEE COMMENTS ON FIGURE 903 (a)—2
5"-6" OVAL
TYPE B-2x6
NOMINAL 2x6 STUDS (MIN) STUD SPACE, 16" O.C. MIN.
DOUBLE PLATE CUT AWAY FOR FULL 14½" WIDTH OF STUD SPACE
FIRE-STOP SPACER

TYPICAL ONE-STORY OR TOP STORY OF MULTISTORY
TYPE BW INSTALLATION REQUIREMENTS

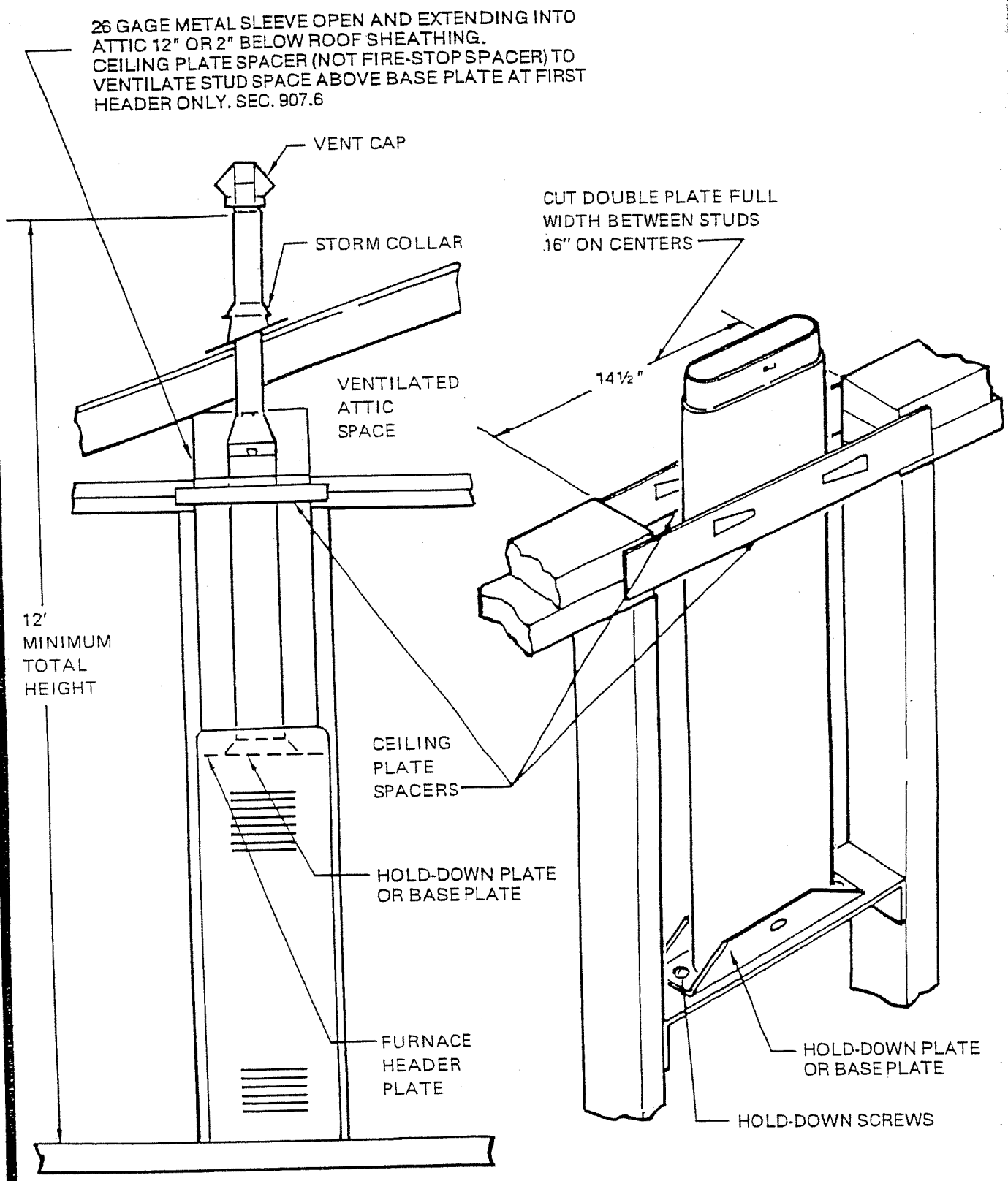

MAXIMUM 85,000 BTU/H INPUT PERMITTED ON TYPE BW VENT FOR SINGLE STORY.
MAXIMUM 65,000 BTU/H INPUT PERMITTED ON TYPE BW VENT FOR MULTISTORY.

TYPE L VENT

VENT TERMINATION FOR OIL-FIRED APPLIANCES
LISTED FOR USE WITH TYPE L VENTING SYSTEMS

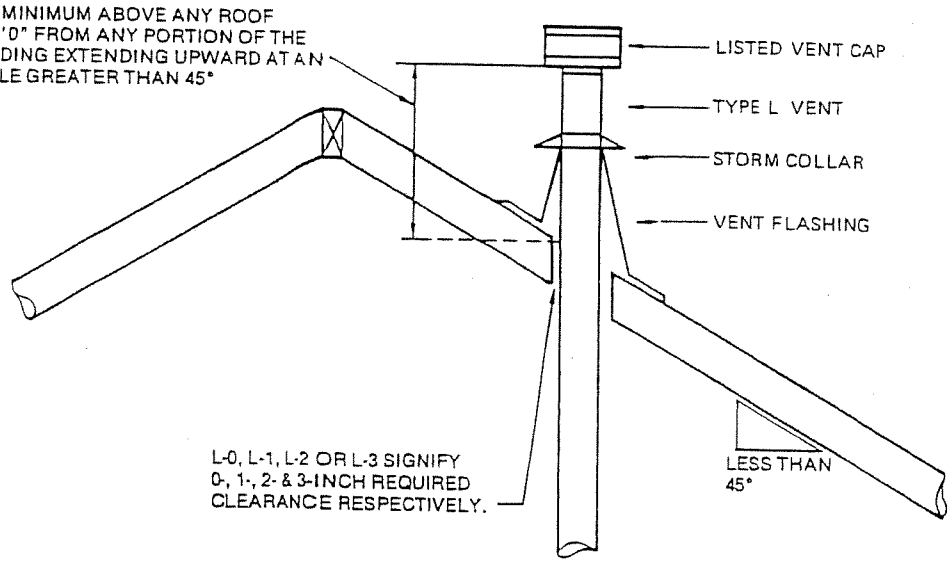

TERMS OF LISTING ARE MORE
RESTRICTIVE THAN U.M.C. REQUIREMENTS

TERMS OF LISTING REQUIRE
2' ABOVE HIGHEST
PORTION OF BUILDING
WITHIN 10'

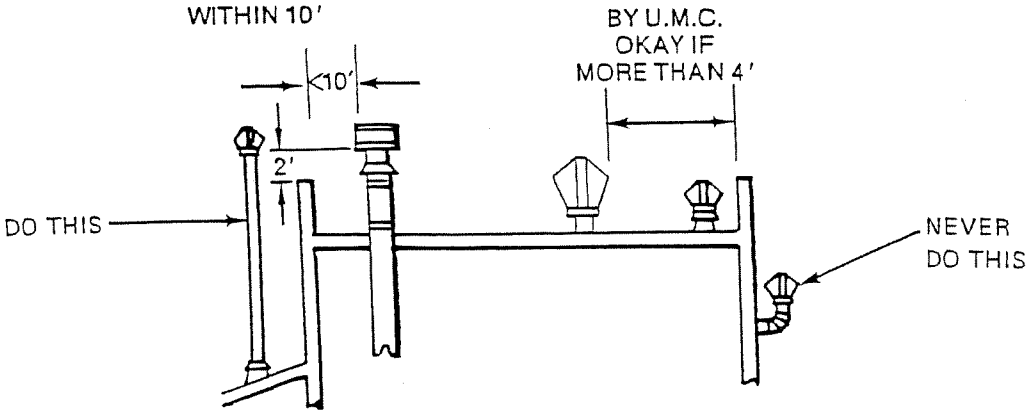

EVERY EVAPORATIVE COOLER SUPPORTED DIRECTLY BY THE GROUND SHALL BE ISOLATED FROM THE GROUND BY A LEVEL CONCRETE SLAB EXTENDING NOT LESS THAN 3" ABOVE THE ADJOINING GROUND LEVEL.

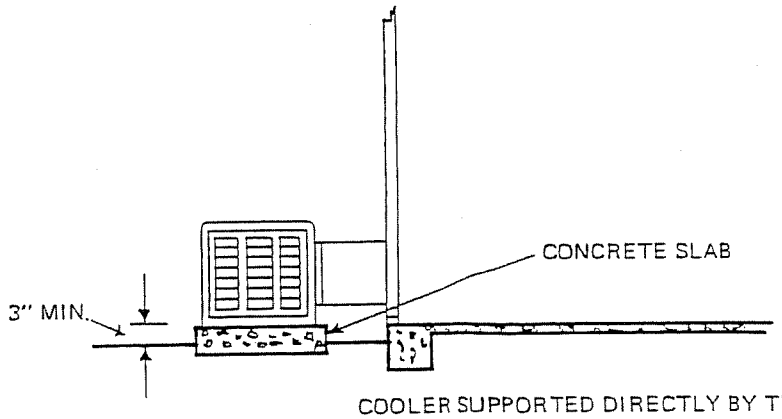

COOLER SUPPORTED DIRECTLY BY THE GROUND

EVERY EVAPORATIVE COOLER SHALL BE INSTALLED ON A LEVEL BASE AT LEAST 6" ABOVE THE ADJOINING GROUND LEVEL AND SHALL BE SUPPORTED IN AN APPROVED MANNER.

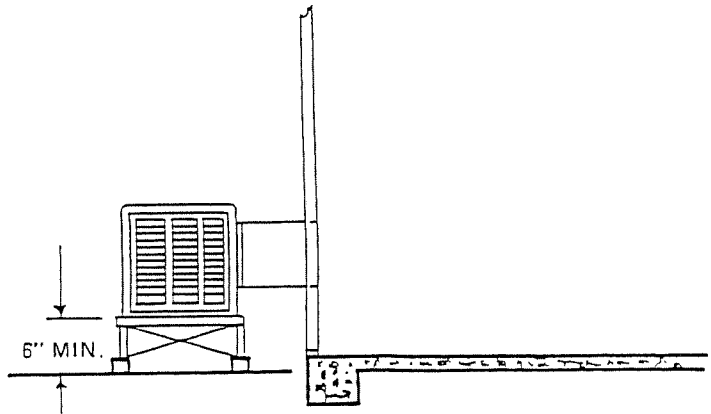

COOLER SUPPORTED FROM THE GROUND ON SUBSTANTIAL LEVEL BASE OTHER THAN SLAB.

Related Code Section: California Mechanical Code 405

These illustrations snow that when an evaporative cooler is mounted on a slab, ground separation of 3 inches is applicable. When an evaporative cooler is mounted on a base other than a concrete slab, ground separation of 6 inches is required.

EVERY EVAPORATIVE COOLER SUPPORTED BY THE BUILDING STRUCTURE SHALL BE INSTALLED ON A SUBSTANTIAL LEVEL BASE AND SHALL BE SECURED DIRECTLY OR INDIRECTLY TO THE BUILDING STRUCTURE BY SUITABLE MEANS TO PREVENT DISPLACEMENT OF THE COOLER. SEE ALSO U.B.C. SEC. 2312 (g).

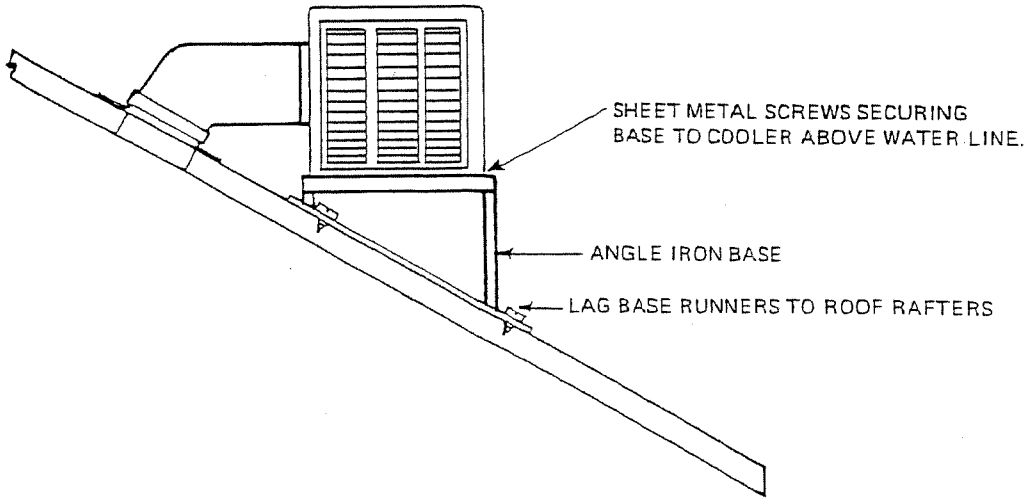

ROOF-MOUNTED – ONE OF MANY ACCEPTABLE METHODS

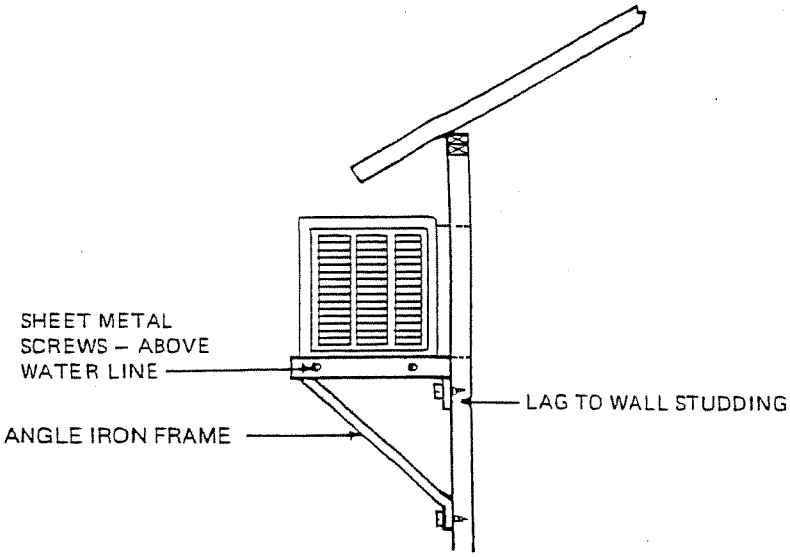

WALL-MOUNTED – ONE OF MANY ACCEPTABLE METHODS

Related Code Section: California Mechanical Code 405

Anchorage of evaporative cooling systems, like other mechanical equipment, must be sturdy and adequate to resist displacement.

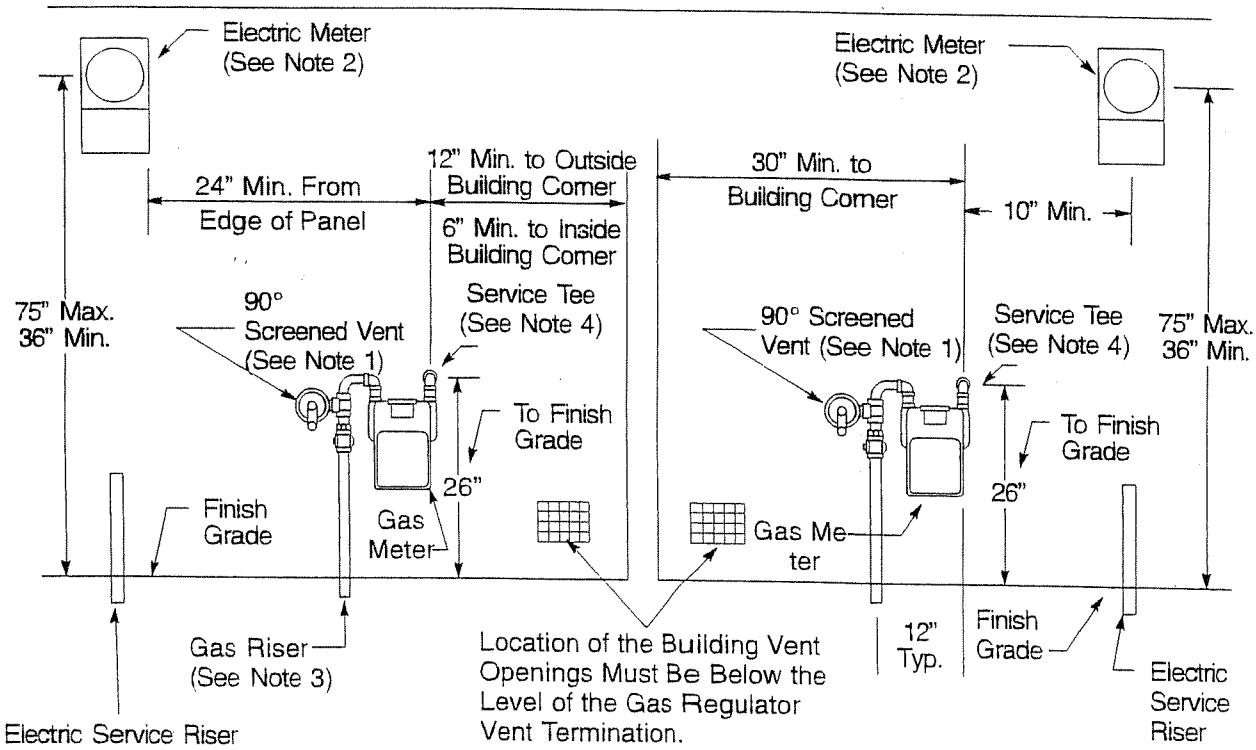

Figure 3-1
Meter Set Separation Dimensions and Clearances

Notes in reference to Figure 3-1.

1. For the service regulator vent locations and termination requirements, see Section 2, Subsection 2.4.4., "Service Regulator Vent Requirements," on Page 2-18.

2. Electric meter panel locations are subject to utility approval and must comply with the applicable code requirements. PG&E has no specific requirement for the distance from the electric panel to the outside building corner. See Section 7, "Electric Metering: General," for more information on properly locating the electric meters.

3. Place the gas riser 6 inches to 9 inches from the finished wall.

4. The completed houseline at the service delivery point (see Section 2, Subsection 2.3.5., "Customer-Owned and Installed Gas Service Piping, Valves, and Automatic Shut-Off Devices," on Page 2-10) must extend 3 inches to 6 inches from the finished wall where the meter is to be set, and must be 26 inches above the finished grade. The houseline at the service delivery point, which is usually located **after** the PG&E service tee for residential services, also must be reinforced so that it will provide support for the meter-set piping. The pipe must be rigid and have a minimum diameter of 3/4 inches, and have tapered pipe threads.

5. Where different service facilities (including gas, electric, and telecommunications facilities) are installed in close proximity (e.g., in a joint trench), a minimum horizontal separation of 12 inches shall be maintained where those facilities transition from below ground to above ground. An exception shall be made for the separation between PG&E secondary, electric-service conduit and gas-service piping, which may be reduced to 6 inches. Clearances between other facilities can be reduced **only** when the parties supplying those services or facilities reach a mutual agreement. However, enough space shall be provided **at all times** to allow for the maintenance and operation of the facilities.

6. In addition, an enclosure for the termination or connection of telecommunication cables, wires, or other equipment, shall not be installed within an area 12 inches above an extending the entire width of the gas meter and service facilities, including the gas service riser. Also, the area immediately behind the gas meter, service facilities and risers, and between those facilities and the premises or structure being served, shall be kept free and clear of all other facilities or equipment such as pipes, wires or cables, or conduits.

Installation Standard
For
TILE-LINED SHOWER RECEPTORS (and Replacements)

IAPMO IS 4-2003

FORWARD

This standard specification for the installation of tile-lined shower receptors is the result of extensive study and research by the following:

Ceramic Tile Institute of America
Associated Tile Contractors of Southern California, Inc.
Tile Layers Local No. 18 of I.U.B.A.C, United States and Canada
Tile Helpers Local No. 18 of I.U.B.A.C., of the United States and Canada

APPROVED CONSTRUCTION OF TILE-LINED SHOWER RECEPTORS

STANDARD SPECIFICATION FOR THE INSTALLATION OF TILE-LINED SHOWER RECEPTORS

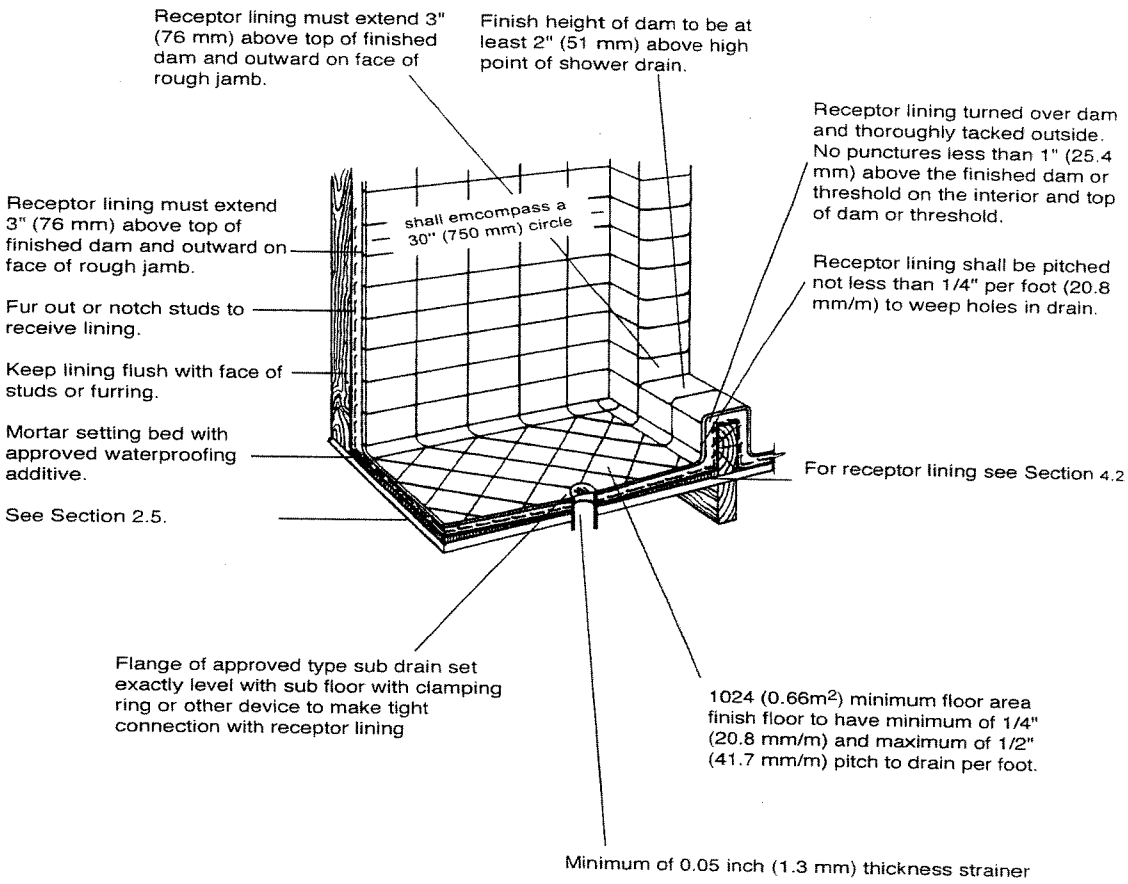

BFG® Vinyl Water Barrier (continued)

Typical Applications

Waterproofing Shower Pans

Use 20, 30 or 56 mil BFG Vinyl Water Barrier. For residential use, 20 mil material is recommended. Install one ply of the membrane dry over the subfloor. Turn the membrane up at least 6" at the side wall. Fold the corners without cutting, adhering the fold to the membrane. Adhere the membrane to the side walls, at the corner fold, and at any lap joints.

Use BFG Construction Adhesive 103 as presc and test for leakage 24 hours after installatior before installing, finish wall surfaces, as per manufacturer's recommendations.

SHOWER PAN WATERPROOFING

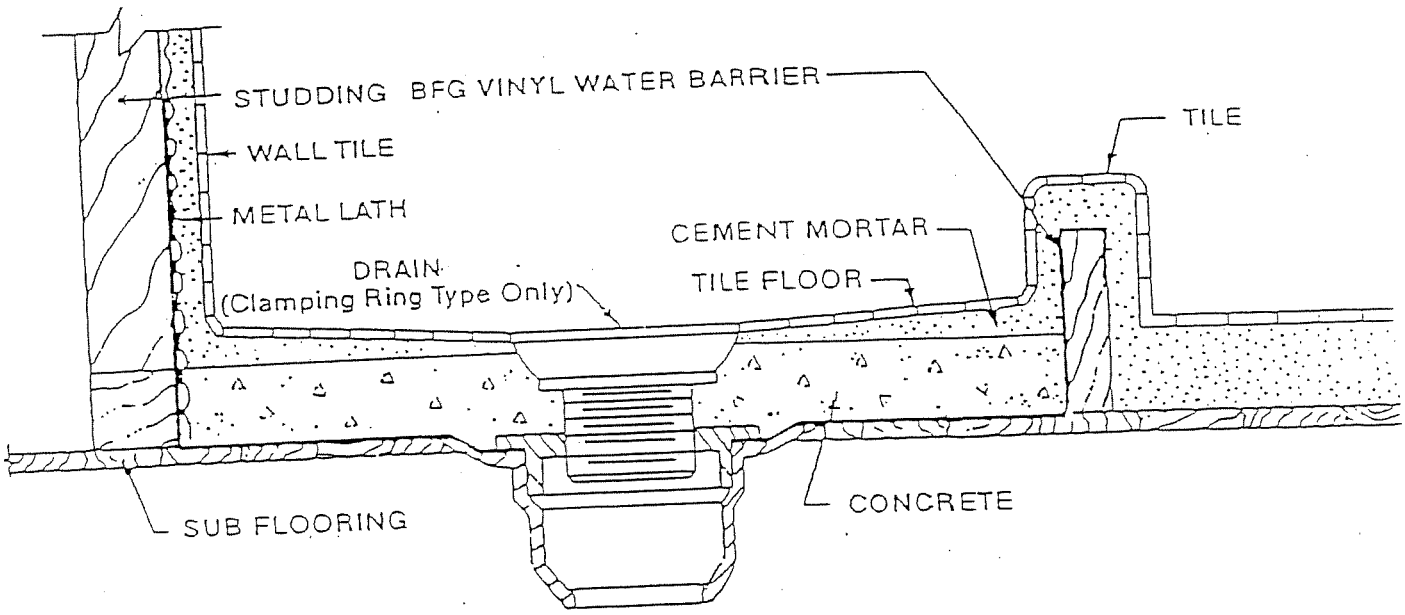

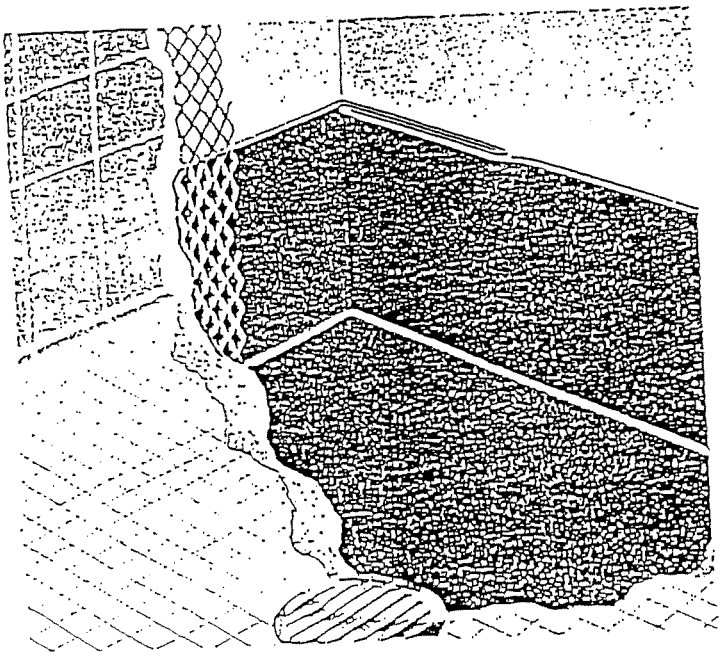

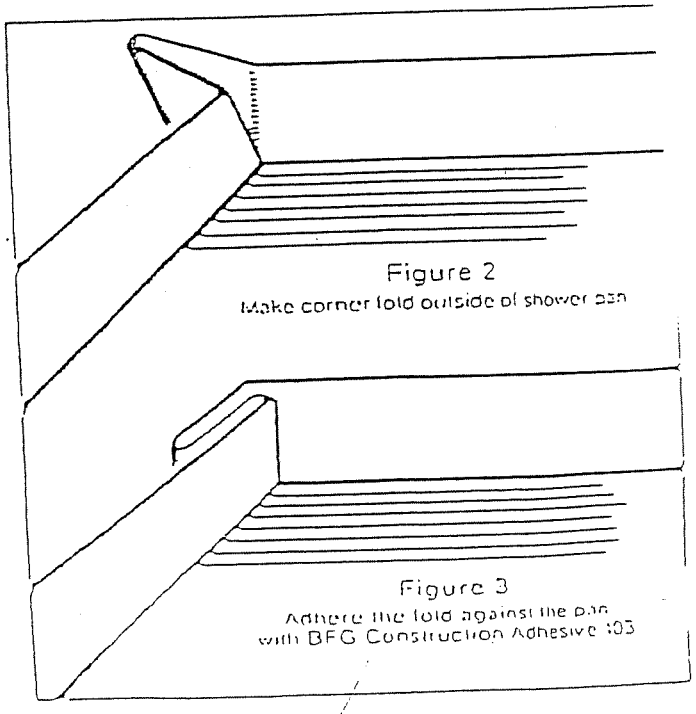

Figure 2
Make corner fold outside of shower pan

Figure 3
Adhere the fold against the pan with BFG Construction Adhesive 103

TILE - SHOWER BUILT-UP

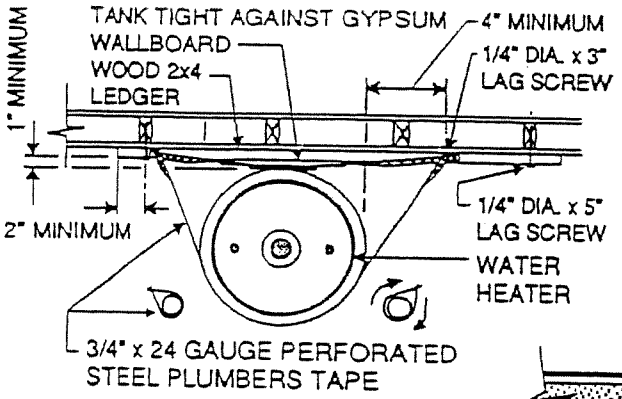

PLAN

MATERIALS NEEDED:
- GYPSUM WALLBOARD (FIRE RESISTANT DRYWALL)
- 24 GAUGE WIRE
- 2- 2x4 x 4'-0" TO 6'-0" LONG
- 4- 10' LENGTHS 3/4" x 24 GAUGE PERFORATED PLUMBERS TAPE
- 4- 1/4" x 5" LAG SCREWS
- 4- 1/4" x 3" LAG SCREWS

TOOLS NEEDED:
- POWER DRILL
- 1- 1/4" DRILL BIT
- 1- 3/16" DRILL BIT
- STUD FINDER
- MEASURING TAPE
- 7/16" OPEN END OR ADJUSTABLE WRENCH

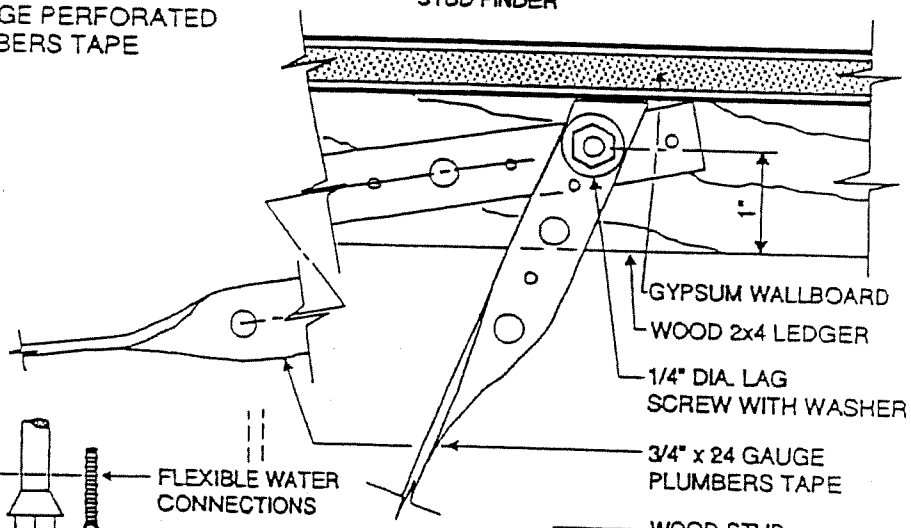

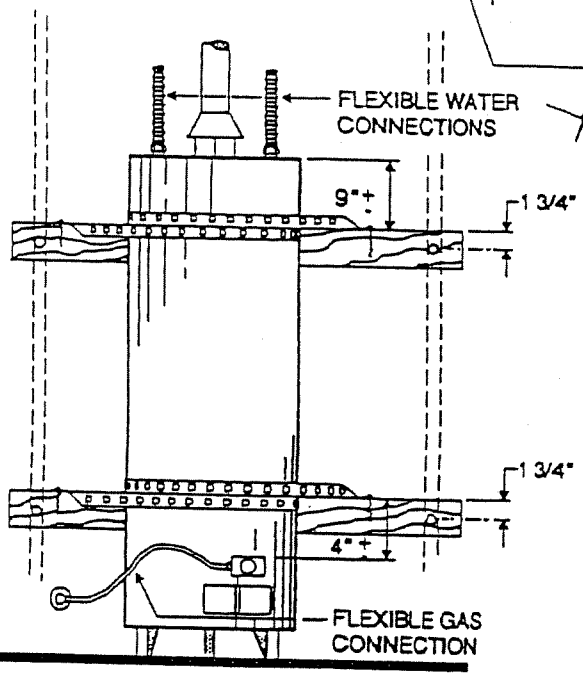

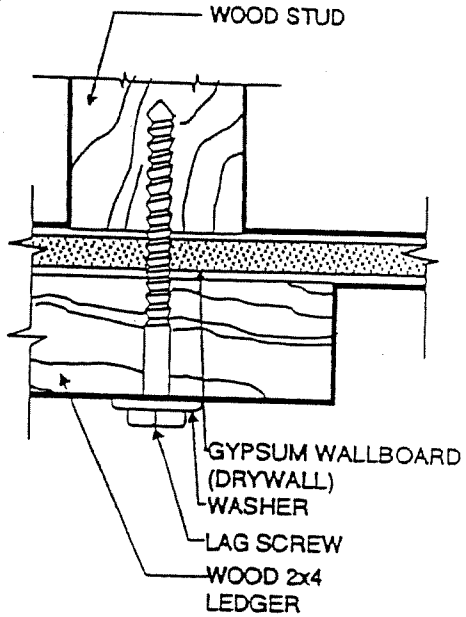

ELEVATION

WATER HEATER ON STRAIGHT WALL

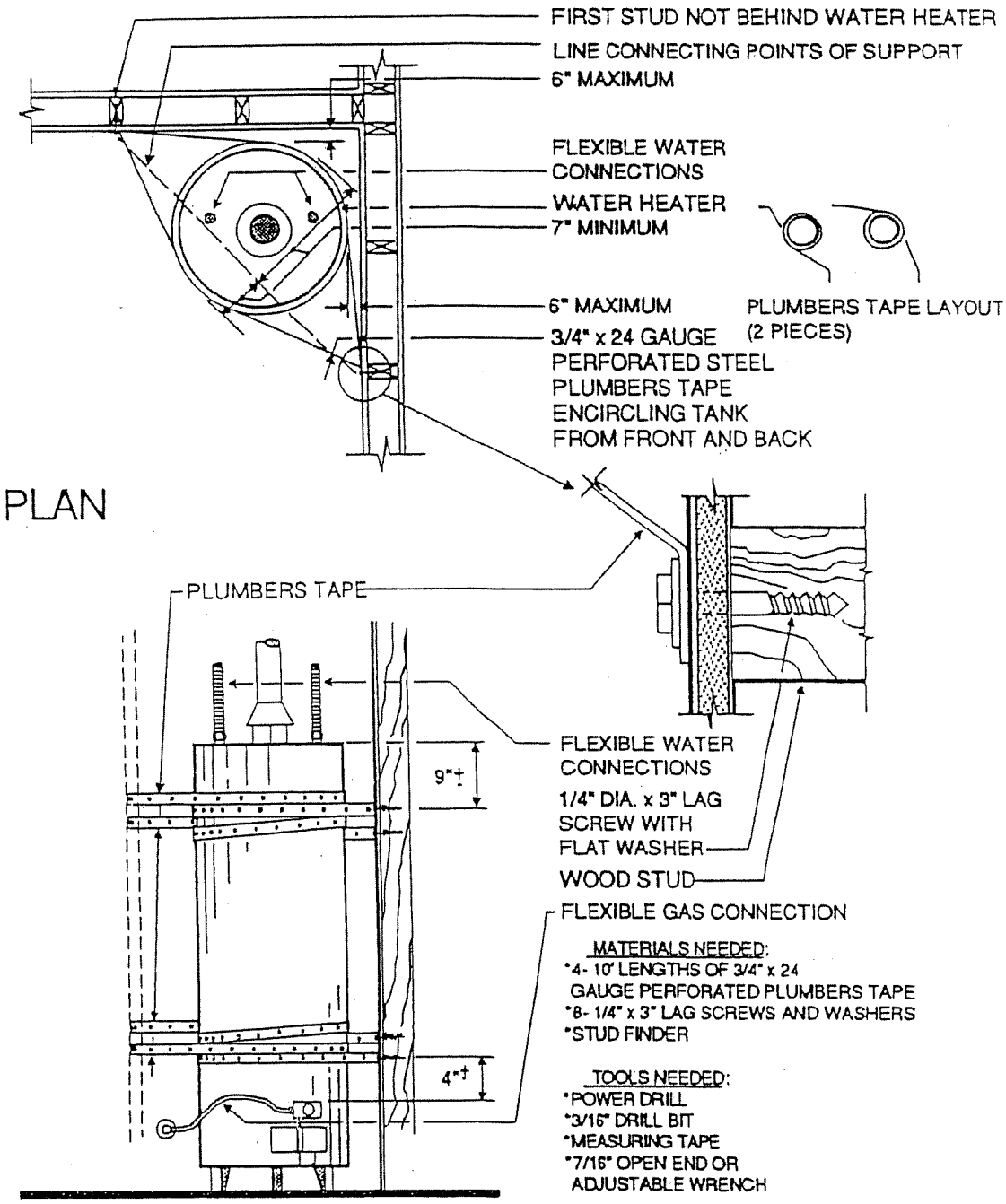

ELEVATION

WATER HEATER IN CORNER

Three acceptable positions for installing are shown in sketches below. Figure 1 installation is preferred when a special tapping is provided in the tank or heater.

A pressure relief valve must be installed as shown to prevent excess pressure by thermal expansion. There must be no valve between the relief valve and heater. Relief valve must be piped to a suitable drain.

Direct side Tapping

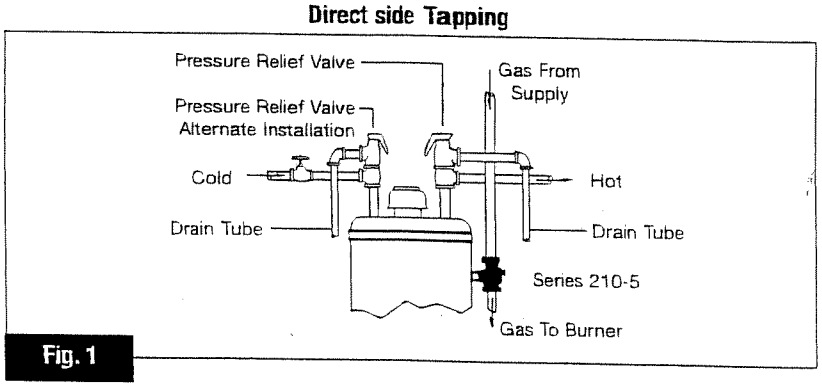

Fig. 1

"Alternate" Only When The Tappings Are Not Provided

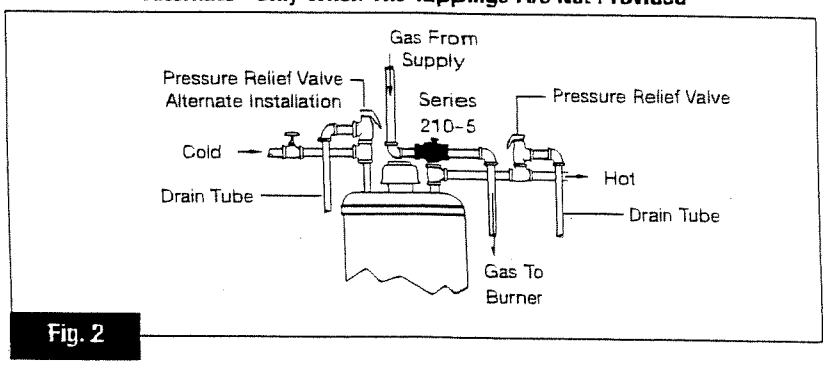

Fig. 2

"Alternate" Only When The Tappings Are Not Provided

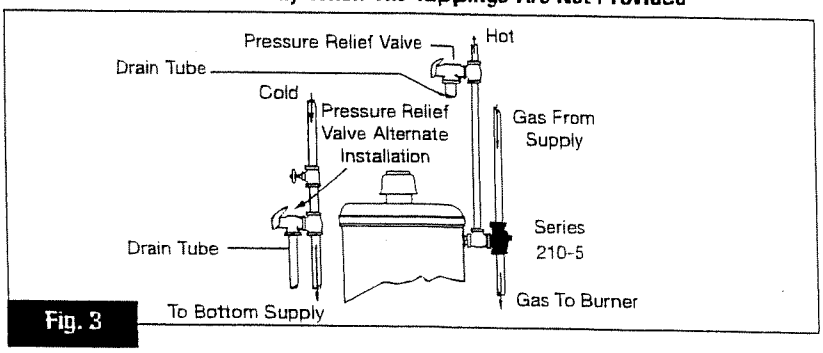

Fig. 3

Note:In addition to the Watts 210, a pressure relief valve and drain is required on HOT water line.

RESIDENTIAL ELECTRICAL LOAD CALCULATION

For One-Family Dwelling (with optional calculation)

[see 220.82 2005 NEC]

VA [watts]

General lighting load ft2 x3va

_____ 20A Small

appliance (2 minimum) @1,500va ___Laundry____

circuit @1,500va each

Total Gen lgt, Sm app, Lau. Load:_____

1st 3,000va @100%____

2nd 3,000va @35% _____

Remainder @25% _____

General lighting demand load _____

Appliances

Water heater; name plate ampere or 4,500va_____

Refrigerator; name plate ampere or 1,400va_____

Freezer; name plate ampere or 600va_____

Dishwasher; name plate ampere or 1,030va_____

Disposal; name plate ampere or 690va_____

Range hood; name plate ampere or 400va_____

Microwave; name plate ampere or 1,600va_____

Other; name plate ampere _____

Total appliance load_____

>4 appliances @ 75% demand factor _____

Heat vss A/C load; greatest load @100% _____

Baseboard heating: nameplate@100% _____

Electric dryer: 5 Kva or nameplate (whichever is larger) _____

Electric range 12 Kva or nameplate (whichever is larger) @80% demand factor _____

[12 !:;ya and less, use 220.55 column C or 8_Kva]

Total service demand_____

Service demand + 240 volts = **Load for service_____amps**

Vpc 2007CEC

See next page for sample worksheet

SAMPLE WORKSHEET

RESIDENTIAL ELECTRICAL LOAD CALCULATION

For One-Family Dwelling (with optional calculation)
[see 220.82 2005 NEC)

	VA [watts]
General lighting load 1161- ft2 x3va	3 ,."-(f3 lc
c, 20A Small appliance (2 minimum) @1,500va	q(I !) t> O
Laundry circuit @1,500va each	/1.5!Jo
Total Gen igt, Sm app, Lau. Load:	I 3/ '1 6
1st 3,000va @100%	Z eoO
/fJ 1 Cjj h 2"d 3,000va @35%	..31 Y<fS
Remainder @25%	
General lighting demand load	r{;; YifS

Appliances

Water heater; name plate ampere	or 4,500va	
Refrigerator; name plate ampere	or 1,400va	I L(C!J O
Freezer; name plate ampere	or 600va	C e> o
Dishwasher; name plate ampere	or 1,030va	1,O.O
Disposal; name plate ampere	or 690va	
Range hood; name plate ampere	or 400va	t(DO
Microwave; name plate ampere	or 1,600va	I 1.. 60 0
Other; name plate ampere		

Total appliance load 5I 0 b 0

>4 appliances @ 75% demand factor 3 79S

Heat vss A/C load; greatest load @100%	21 CftJ O
Baseboard heating: nameplate@100%	
Electric dryer: 5 Kya or nameplate (whichever is larger)	5,000
Electric range 12 Kva or nameplate (whichever is larger)@80% demand factor [12,Kva and less, use 220.55 column C or 8Kva]	ZS oNJ
Total service demand	;U,1 5t.;'O

Service demand + 240 volts = Load for service I f f amps

Vpc 2007CEC