WEATHERIZATION PROGRAM CHECK LIST

*****DO NOT RETURN YOUR APPLICATION WITHOUT THE NINE (9) DOCUMENTS LISTED BELOW*****

All Weatherization applicants are responsible for providing the following documentation that is required by the State of California, without the proper information your application will not be processed. ***It is the client's responsibility to make copies of their utility bill, proof of income, disability proof and legal status forms.***

☐ **1.** Complete and **SIGN** Energy Intake Form (CSD 43)

☐ **2.** Complete and **SIGN** one Declaration of No Income Form (CSD 43B) for each household member over 18 years of age who claims no income. Please make additional copies if needed.

☐ **3.** Complete and **SIGN** Statement of Citizenship Status For Public Benefits Form. (Fill out **BOTH** pages of form CSD 600)

☐ **4.** A copy of a document to verify legal status in the USA for the person applying for Weatherization Program. For acceptable documents see other side for details. ➔

☐ **5.** A copy of your **current monthly** utility bill (**within past six weeks**).

- The **ENTIRE** blue tab **(every page)**, regular PG&E bill statement that you receive every month (has blue strip which says "Energy Statement" and includes an "Account Summary" which states service dates, days and charges for gas and/or electricity). Bill must have at <u>least 22 billing days</u> and show customer's name and service address.
- Account Information Sheet printed from your local PG&E office is acceptable IF it includes information noted above.
- If your account is sub-metered (utilities included in your rent), send your sub-metered statement for the current month.

☐ **6.** A copy of documents verifying current total GROSS MONTHLY INCOME for all household members. For acceptable documents see next page.

☐ **7.** Complete and **SIGN** Energy Service Agreements for Owner Occupied Units.

☐ **8.** Complete and **SIGN** Post Weatherization Lead Presence Test.

☐ **9.** Complete and **SIGN** the Client/Customer Consent Form

PLEASE REMEMBER TO SEND ALL 9 DOCUMENTS

Providing Proof of Legal Status

ACCEPTABLE:

►Citizenship status (if you were born in the USA):

- A copy of your birth certificate-**the person applying for assistance.**
- A copy of your child's birth certificate **ONLY** if it states your name and **where YOU were born**
- A copy of your marriage license **ONLY** if it states your name and **where YOU were born**
- A copy of your passport

►Naturalization status:

- Naturalization certificate
- A copy of U.S. passport

►Alien status:

- A copy of both sides of your Resident Alien Card (green card) ***(not valid if expired)***
- A copy of any other document listed on the Statement of Citizenship Status Form

NOT ACCEPTABLE:

- Driver's license
- Social Security card
- Child's birth certificate or marriage certificate that does not state parent's/applicant's **birth place**

Providing Proof of Income

(*provide all of the following that apply to you***)**

► Income proof must be from **every person that has income** and lives in the home.
► Income is for **a current month** - if you get paid once a week, send in 4 check stubs.
► All documents must be official, **no hand written information.**
► All documents must be **current** (**within the last 6 weeks).**

► ACCEPTABLE PROOF OF INCOME:

- Pay check stubs showing pay period and Gross Income
- Welfare (TANF) Printout from Employment and Human Services
- Social Security (send letter from Soc. Sec. or a direct deposit statement of your bank account)
- Social Security Disability Income
- Spousal & Child Support Court Documents or letter from Child Support Services
- Worker's Comp Printout from Worker's Comp provicer
- Unemployment Insurance/State Disability Insurance letter from EDD or direct deposit statement of your bank account)
- Retirement & Pension
- Self employment – Signed copy of current year's 1040 and a copy of Schedule C.

If you are denied services and/or you receive unsatisfactory services or an untimely response to your application, you have the right to appeal. Contact (925) 674-7214 will start the appeal process.

FREE WEATHERIZATION - HOME IMPROVEMENTS

What we Offer?

By meeting the income guideline and filling out a simple application you can qualify for free weatherization home improvement. The energy savings may include:

- Repair or replace heating systems
- Repair or replace water heater
- Repair or replace cooking appliances
- Microwaves
- Refrigerators
- Ceiling fans
- Smoke Alarms
- Ceiling Insulation
- Weather Stripping
- Thermostats
- Energy efficient light bulbs
- Carbon Monoxide detector

Weatherization Process

Once the application has been accepted, a qualified representative from the program will come to your home and do an on-site assessment.

The assessment will include an inspection of all the gas burning appliances in the home and an evaluation of any energy savings measures which can be performed within the program guidelines.

Any of the gas burning appliances which fail the combustion appliance safety inspection may be eligible to be repaired or replaced and any energy saving measures which can be performed will be installed.

Are you eligible?

The program is available to residents of Contra Costa County. Homeowners and renters of single family homes, apartments, or mobile homes that meet the incomes limits below are eligible.

2020 WEATHERIZATION ASSISTANCE PROGRAM INCOME GUIDELINES
LIHEAP Valid through 10/31/20 DOE* Valid through 06/30/20

Size of Household	LIHEAP Total Monthly Gross Income	DOE* Total Monthly Gross Income
1	$2,296.93	$2,081.67
2	$3,003.67	$2,818.33
3	$3,710.42	$3,555.00
4	$4,417.17	$4,291.67
5	$5,123.91	$5,028.33
6	$5,830.66	$5,765.00
7	$5,963.18	$6,501.67
8	$6,095.69	$7,238.33
9	$6,228.21	$7,975.00
10	$6,360.72	$8,711.67

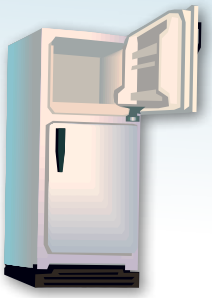
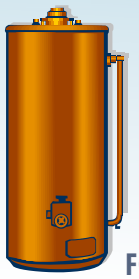

*DOE Eligible only if no previous Weatherization on unit.

FOR MORE INFORMATION OR AN APPLICATION PLEASE CALL (925) 674-7214
www.cccounty.us/weatherization

Department of Community Services and Development

Account Holder Authorization and Consent Form

CSD Form 081 (Rev. 12/17)

ACCOUNT HOLDER NAME(S) AND MAILING ADDRESS

Account Holder's Full Name		
Account Holder's mailing address (Street)		Unit Number (if any)
(City)	State	Zip Code
Is the utility service address the same as the account holder's mailing address? ☐ Yes ☐ No		
Full Name of Applicant for Benefits (from Form 43)		
Utility Service Address (Street)		Unit Number (if any)
(City)	State CA	Zip Code

UTILITY INFORMATION

Please enter your utility company name and service account number below (you can find the account number on your bill). If different companies provide your electricity and gas services, please enter the name and account number for both utilities.

Name of Utility Company	Service Account Number
Name of Utility Company (if you have a second Utility Company)	Service Account Number

AUTHORIZATION AND CONSENT

By signing this form, you (Account Holder) give your authorization and consent (permission) to CSD, its contractors, consultants, other federal or state agencies (CSD Partners) and to your utility company and its contractors, to share information about your property's utility account, meter usage and energy consumption data, and other information as needed for the period beginning 24 months prior to, and continuing for 36 months after, the date signed below. The information you authorize us to obtain and share will be used for the purposes of evaluating home energy usage of program beneficiaries so that CSD can: a) measure the effectiveness of the services we provide by determining how much your utility bills are reduced and how much our services reduce carbon emissions (air pollution), and b) report these results to federal and state authorities that fund and oversee energy assistance programs in California. CSD, its contractors, consultants, other federal or state agencies and affiliated programs (CSD Partners), working cooperatively with your utility company and its contractors, use this information to provide services that assist low-income families, such the applicant, to pay their home energy bills and mange those energy needs for the purposes stated in this Authorization.

Signature of Account Holder	**Date**

Name of CSD Contractor/Partner Organization
Contra Costa County

REVOCATION OF AUTHORIZATION AND CONSENT

You agree that your consent shall remain in effect for 36 months from the date you sign this Authorization, unless otherwise revoked by written notice mailed to: CSD Energy & Environmental Services Division, 2389 Gateway Oaks Drive, Suite 100, Sacramento, CA 95833. Revocation will be effective upon receipt, but will not apply to any information shared while this Authorization was valid.

APPLICABLE PROGRAMS

Some of the programs CSD oversees or partners with include:

- CSD Federal Low-Income Home Energy Assistance Program (LIHEAP)
- CSD Federal Department of Energy Weatherization Assistance Program (DOE WAP)
- State Low-Income Weatherization Program (LIWP)
- Department of Housing and Urban Development (HUD) Lead Hazard Control and Healthy Homes Program
- Utility Company Energy Savings Assistance (ESA) Program
- Utility Company California Alternate Rates for Energy (CARE) Program

Department of Community Services and Development
Energy Intake Form
CSD 43 (10/2017)

Official Use Only:	
Priority Points	
A.C.C.	
Eligibility Cert Date	

Agency: 60019 Contra Costa County Intake Initials: Intake Date:

First name	Middle Initial	Last Name	Date of Birth *MM/DD/YY*

SERVICE ADDRESS – Address where you live (this *cannot* be a P.O. Box)

Service Address			Unit Number
Service City	Service County	Service State	Service Zip Code

Have you lived at this residence during each of the past 12 months? ..... ☐ Yes ☐ No
Is your service address the same as mailing address?..... ☐ Yes ☐ No

Mailing Address			Unit Number
Mailing City	Mailing County	Mailing State	Mailing Zip Code

Social Security Number (SSN): | | | | | | | | | | | Telephone Number ( )

E-mail Address:

PEOPLE LIVING IN HOUSEHOLD Enter the total number of people living in the household, including yourself →		**INCOME** Enter the total number of people who receive income →	
Demographics: Enter the number of people in the household who are:		*Enter the total **gross** monthly income for **all** people living in the household:*	
Ages 0 – 2 Years		TANF / CalWorks	$
Ages 3 - 5 years		SSI / SSP	$
Ages 6 - 18 years		SSA / SSDI	$
Ages 19 - 59		Paycheck(s)	$
Ages 60 and older		Interest	$
Disabled		Pension	$
Native American		Other	$
Seasonal or Migrant Farmworker		**Total Monthly Income**	**$**

HOUSEHOLD MEMBERS

ENTER THE INFORMATION BELOW FOR **ALL** HOUSEHOLD MEMBERS.
If you have more than 7 people in your household, please list the information on a separate piece of paper.

First Name	**Last Name**	**Relation to Applicant**	**Date of Birth** MM/DD/YY	**Amount of Gross Monthly Income** (Before Taxes and Deductions)	**Source of Income**
		Self			
			Household Total Monthly Gross Income	**$**	

Are you or someone in your household CURRENTLY receiving CalFresh (Food Stamps)? ☐ Yes ☐ No

PAY BILL

To which energy bill (CHOOSE ONLY ONE) do you want the LIHEAP benefit to be applied? (Attach complete copy of most recent bill or receipt)

☐ Natural Gas ☐ Electricity ☐ Wood ☐ Propane ☐ Fuel Oil ☐ Kerosene ☐ Other Fuel

Enter the energy company and account number:

Company Name: _____ Account #: _____

Is your utility service shut-off? ☐ Yes ☐ No

Do you have a past due notice? ☐ Yes ☐ No

Are your utilities included in rent or submetered? ☐ Yes ☐ No

Are your utilities all electric? ☐ Yes ☐ No

Is your Natural Gas Company the same as your Electric Company? ☐ Yes ☐ No

WOOD, PROPANE or FUEL OIL SERVICE (WPO)

Are you currently out of fuel? (Wood, Propane, Oil, Kerosene, Other Fuels) ☐ Yes ☐ No ☐ N/A

List the approximate number of days until you run out of fuel (Wood, Propane, Oil, Kerosene, Other Fuels).

Number of Days: _____ ☐ N/A

ENERGY INFORMATION

The questions below are **MANDATORY.** Please check all energy sources used to heat your home.

A copy of **all** recent energy bills and/or receipts for any home energy cost **must** be provided.

NOTE: A copy of an electric bill must be included even if you do not use electricity to heat your home.

What is the main fuel used to HEAT your home? One main heating source **MUST** be checked.

☐ Natural Gas ☐ Electricity ☐ Wood ☐ Propane ☐ Fuel Oil ☐ Kerosene ☐ Other Fuel

In addition to your main heating source, do you ever use any of the following to heat your home (you can select more than one):

☐ Natural Gas ☐ Electricity ☐ Wood ☐ Propane ☐ Fuel Oil ☐ Kerosene ☐ Other Fuel ☐ N/A

Are you the account holder: Electric Bill ☐ Yes ☐ No **Natural Gas Bill** ☐ Yes ☐ No

The information on this application will be used to determine and verify my eligibility for assistance. By signing below, I give my consent (permission) to CSD, its contractors, consultants, other federal or state agencies (CSD Partners) and to my utility company and its contractors, to share information about my household's utility account, energy usage and/or other information needed to provide services and benefits to me as described at the end of the form. My consent shall be effective for the period beginning 24 months prior to, and continuing for 36 months after, the date signed below. I understand that if my application for LIHEAP/DOE benefits or services is denied, or if I receive untimely response or unsatisfactory performance, I may initiate a written appeal with the local service provider and my appeal shall be reviewed no later than 15 days after the appeal is received. If I am not satisfied with the local service provider's decision I may then appeal to the Department of Community Services and Development pursuant to Title 22, California Code of Regulations section 100805. If applicable, I hereby authorize installation of weatherization measures to my residence at no cost to me. I declare, under penalty of perjury, that the information on this application is true, correct, and that the funds received will be used solely for the purpose of paying my energy costs.

X		
	*** APPLICANT'S SIGNATURE ***	Date

AGENCY NAME: Community Services and Development (CSD). UNIT RESPONSIBLE FOR MAINTENANCE: Home Energy Assistance Program (HEAP). AUTHORITY: Government Code Section 16367.6 (a) Names CSD as the agency responsible for managing HEAP. PURPOSE: The information you provide will be used to decide if you are eligible for a LIHEAP payment and/or weatherization services. GIVING INFORMATION: This program is voluntary. If you choose to apply for assistance, you must give all required information. OTHER INFORMATION: CSD uses statistical definitions from the annual update of the Department of Health and Human Services' State Median Income, Federal Income Poverty Guidelines, to determine program eligibility. During application processing, CSD's designated subcontractor may need to ask you for more information to decide your eligibility for either or both programs. ACCESS: CSD's designated subcontractor will keep your completed application and other information, if used, to determine your eligibility. You have the right to access all records holding information about you. CSD does not discriminate in the provision of services on the basis of race, religious creed, color, national origin, ancestry, physical disability, mental disability, medical condition, marital status, sex, age, or sexual orientation.

APPLICANT: DO NOT FILL OUT THE INFORMATION BELOW. THIS SECTION IS FOR OFFICIAL USE ONLY.

Utility Assistance being provided under which program → ☐ HEAP ☐ Fast Track ☐ HEAP WPO ☐ ECIP WPO

Base Benefit $_____ **Supplement $**_____ **Total Benefit $**_____

Total Energy Cost $_____ **Energy Burden** _____

Energy Services Restored after disconnection: ☐ Yes ☐ No Disconnection of Energy Services prevented: ☐ Yes ☐ No

Home Referred for WX: ☐ Home Already Weatherized: ☐

STATEMENT OF CITIZENSHIP or NON-CITIZEN STATUS FOR PUBLIC BENEFITS

Name of the Applicant Requesting Energy Services	Date
Name of Person Acting for Applicant, if any	Relationship to Applicant

Public Benefits To Citizens And Non-Citizens

Citizens and Nationals of the United States who meet all eligibility requirements may receive services under the Low-Income Home Energy Assistance Program and/or the Department of Energy Low-Income Weatherization Assistance Program and must fill out ***Sections A and D.***

Non-Citizens who meet all eligibility requirements may receive services under the Low-Income Home Energy Assistance Program and/or the Department of Energy Low-Income Weatherization Assistance Program and must complete ***Sections A, B or C, and D.***

Section A: Citizenship/Non-Citizen Status Declaration

1. Is the applicant a citizen or national of the United States? ☐ Yes ☐ No

   If the answer to the above question is yes, where was he/she born? City/State

2. To establish citizenship or naturalization, please submit one of the documents on ***List A*** (attached hereto) which is legible and unaltered to establish proof.

If you are a **Citizen or National of the United States**, please go directly to ***Section D*** .

If you are a **Non-Citizen**, please complete ***Section B, or, if applicable, Section C*** .

Section B: Non-Citizen Status Declaration

Important: Please indicate the applicant's non-citizen status below, and submit documents evidencing such status. The no citizen status documents listed for each category are the most commonly used documents that the United States Immigration and Naturalization Service (INS) provides to non-citizens in those categories. You can provide other acceptable evidence of your non-citizen status even if not listed below.

☐ 1. An alien lawfully admitted for permanent residence under the Immigration and Naturalization Act (INA). Evidence includes:
- INS Form I-551 (Alien Registration Receipt Card, commonly known as a “green card”); or
- Unexpired Temporary I-551 stamp in foreign passport or on INS Form I-94.

☐ 2. An alien who is granted asylum under section 208 of the INA. Evidence includes:
- INS Form I-94 annotated with stamp showing grant of asylum under section 208 of the INA;
- INS Form I-688B (Employment Authorization Card) annotated “274a.12(a)(5)”;
- INS Form I-766 (Employment Authorization Document) annotated “A5”;
- Grant letter from the Asylum Office of INS; or
- Order of an immigration judge granting asylum.

☐ 3. A refugee admitted to the United States under section 207 of the INA. Evidence includes:
- INS Form I-94 annotated with stamp showing admission under section 207 of the INA;
- INS Form I-688B (Employment Authorization Card) annotated “274a.12(a)(3)”;
- INS Form I-766 (Employment Authorization Document) annotated “A3”; or
- INS Form I-571 (Refugee Travel Document)

☐ 4. An alien paroled into the United States for at least one year under section 212(d)(5) of the INA. Evidence includes:
- INS Form I-94 with stamp showing admission for at least one year under section 212(d)(5) of the INA. (Applicant cannot aggregate periods of admission for less than one year to meet the one-year requirement.)

☐ 5. An alien whose deportation is being withheld under section 243(h) of the INA (as in effect prior to April 1, 1997) or section 241(b)(3) of such Act (as amended by section 305(a) of division C of Public Law 104-208). Evidence includes:
- INS Form I-688B (Employment Authorization Card) annotated "274a.12(a)(10)";
- INS Form I-766 (Employment Authorization Document) annotated "A10"; or
- Order from an immigration judge showing deportation withheld under section 243(h) of the INA as in effect prior to April 1, 1997, or removal withheld under section 241(b)(3) of the INA.

☐ 6. An alien who is granted conditional entry under section 203(a)(7) of the INA as in effect prior to April 1, 1980. Evidence includes:
- INS Form I-94 with stamp showing admission under section 203(a)(7) of the INA;
- INS Form I-688B (Employment Authorization Card) annotated "274a.12(a)(3)"; or
- INS Form I-766 (Employment Authorization Document) annotated "A3."

☐ 7. An alien who is a Cuban or Haitian entrant (as defined in section 501(e) of the Refugee Education Assistance Act of 1980). Evidence includes:
- INS Form I-551 (Alien Registration Receipt Card, commonly known as a "green card") with the code CU6, CU7, or CH6;
- Unexpired temporary I-551 stamp in foreign passport or on INS Form I-94 with the code CU6 or CU7; or
- INS Form I-94 with stamp showing parole as "Cuban/Haitian Entrant" under section 212(d)(5) of the INA; or paroled after 10/10/80 in the special status for nationals of Cuba or Haiti.

☐ 8. An alien paroled into the United States for less than one year under section 212(d)(5) of the INA. (Evidence includes INS Form I-94 showing this status.)

☐ 9. An alien not in categories 1 through 8 who has been admitted to the United States for a limited period of time (a nonimmigrant). Non-immigrants are persons who have temporary status for a specific purpose. (Evidence includes INS Form I-94 showing this status.)

☐ 10. I self-certify that I am a U.S. citizen or non-citizen national or qualified alien but am unable to provide documentation. (Only allowable under the Energy Crisis Intervention Program (ECIP) component of the LIHEAP Program.)

Section C: Declaration for Certain Battered Aliens

Important: Complete this section if the applicant, the applicant's child, or the applicant child's parent has been battered or subjected to extreme cruelty in the United States by a spouse or parent.

☐ 1. Has the INS or the EOIR granted a petition or application filed by or on behalf of the applicant, the applicant's child, or the applicant child's parent under the INA or found that a pending petition sets forth a prima facie case for granting permission to stay in the United States? Evidence includes one of the documents on List B (attached hereto).

☐ 2. Has the applicant, the applicant's child, or the applicant child's parent been battered or subjected to extreme cruelty in the United States by a spouse or parent, or by a spouse's or parent's family member living in the same house (where the spouse or parent consented to or acquiesced in the battery or cruelty)?

Section D: Certification

I DECLARE UNDER PENALTY OF PERJURY UNDER THE LAWS OF THE STATE OF CALIFORNIA THAT THE ANSWERS I HAVE GIVEN ARE TRUE AND CORRECT TO THE BEST OF MY KNOWLEDGE.

Applicant's Signature	Date
Signature of Person Acting for Applicant	Date

Attachments: Lists A and B

Department of Community Services and Development Name of applicant: _____

CSD 43B (rev.12/2013)

CERTIFICATION OF INCOME AND EXPENSES

You are being asked to complete this form because you requested assistance, and state that your entire household cannot provide proof of income. The State of California requires the applicant to report all sources of income. This form will help us understand how you are meeting expenses. Please complete the information below:

Name and Address	
Name:	
Address:	

Section 1: Do you have sources of income you forgot to report?		
YES	NO	During the previous month have you been employed part time?
YES	NO	During the previous month have you been self-employed?
YES	NO	During the previous month did you receive money for any work that you perform only once in a while, like yard work, child care, donating blood, etc?
YES	NO	During the previous month have you received any gifts of money from anyone? If yes, please list the name and phone number of the person who gave you the gift:
YES	NO	During the previous month did you receive any of the following: (circle any that apply) WORKER'S COMP / UNEMPLOYMENT / GOVERNMENT SPONSORED BENEFITS / CHILD SUPPORT
YES	NO	Do you receive any of the following (circle any that apply) ANNUITY PAYMENT / PENSION / TRIBAL CASINO PAYMENTS / RENTAL INCOME / INSURANCE BENEFITS

Section 2: Are you spending your savings or borrowing money to cover monthly expenses?		
YES	NO	Are you using savings or a home equity loan? How much? _____
YES	NO	Are you using some other asset? How much?_____
YES	NO	Are you borrowing from credit cards? How much?_____
YES	NO	Are you borrowing from some other source? How much?_____

Put Notary stamp below, if needed (DOE only) or have Executive Director Sign here

Section 3: Please tell us how you paid these monthly expenses during the previous months:

EXPENSE	MONTHLY COST	HOW HAS THE EXPENSE BEEN PAID?	IF SOMEONE ELSE PAYS FOR YOU, PLEASE COMPLETE:	
Rent or Mortgage	$		Name:	Phone:
			Address:	
Utility Bills	$		Name:	Phone:
			Address:	
Food	$		Name:	Phone:
			Address:	

Section 4: If none of the above applies to you, please explain how your monthly expenses were paid:

_____

_____

_____

Signature:

By signing this form, I affirm that I believe these facts are accurate and true. I give the Service Provider my permission to verify this information. I may be held liable under federal or state law for knowingly making false or fraudulent statements.

_____ _____

Signature Date

Department of Community Services and Development
CSD 43B (rev.12/2013)

Name of Applicant: _____

CERTIFICATION OF INCOME AND EXPENSES

You are being asked to complete this form because you requested assistance, and state that your entire household cannot provide proof of income. The State of California requires the applicant to report all sources of income. This form will help us understand how you are meeting expenses. Please complete the information below:

Name and Address	
Name:	
Address:	

Section 1: Do you have sources of income you forgot to report?		
YES	NO	During the previous month have you been employed part time?
YES	NO	During the previous month have you been self-employed?
YES	NO	During the previous month did you receive money for any work that you perform only once in a while, like yard work, child care, donating blood, etc?
YES	NO	During the previous month have you received any gifts of money from anyone? If yes, please list the name and phone number of the person who gave you the gift:
YES	NO	During the previous month did you receive any of the following: (circle any that apply) WORKER'S COMP / UNEMPLOYMENT / GOVERNMENT SPONSORED BENEFITS / CHILD SUPPORT
YES	NO	Do you receive any of the following (circle any that apply) ANNUITY PAYMENT / PENSION / TRIBAL CASINO PAYMENTS / RENTAL INCOME / INSURANCE BENEFITS

Section 2: Are you spending your savings or borrowing money to cover monthly expenses?		
YES	NO	Are you using savings or a home equity loan? How much? _____
YES	NO	Are you using some other asset? How much?_____
YES	NO	Are you borrowing from credit cards? How much?_____
YES	NO	Are you borrowing from some other source? How much?_____

Put Notary stamp below, if needed (DOE only) or have Executive Director Sign here

Section 3: Please tell us how you paid these monthly expenses during the previous months:

EXPENSE	MONTHLY COST	HOW HAS THE EXPENSE BEEN PAID?	IF SOMEONE ELSE PAYS FOR YOU, PLEASE COMPLETE:	
Rent or Mortgage	$		Name:	Phone:
			Address:	
Utility Bills	$		Name:	Phone:
			Address:	
Food	$		Name:	Phone:
			Address:	

Section 4: If none of the above applies to you, please explain how your monthly expenses were paid:

_____

_____

_____

Signature:

By signing this form, I affirm that I believe these facts are accurate and true. I give the Service Provider my permission to verify this information.
I may be held liable under federal or state law for knowingly making false or fraudulent statements.

_____ _____
Signature Date

STATE OF CALIFORINA
DEPARTMENT OF COMMUNITY SERVICES AND DEVELOPMENT
CSD 515A (Rev. 2/12/16)

Applicant Name: _____

ENERGY SERVICE AGREEMENT FOR OCCUPANT

Dwelling Information			
Select the Dwelling Type		I am the	
Single-Family ☐	Mobile Home ☐ Multi-Unit ☐	Owner-Occupant ☐	Tenant ☐

Owner-Occupant or Tenant Information			
Owner-Occupant or Tenant (Print or type name)		Address	
Apt./Unit No.	City	ZIP Code	Telephone Number
Owner-Occupant or Tenant Email Address			Owner-Occupant or Tenant FAX Number

Owner-Occupant or Tenant Acceptance of Terms for CSD Weatherization Services
(to be completed by the Owner-Occupant or Tenant)

I agree to accept the following TERMS required for my primary residence to receive services from the Department of Community Services and Development (CSD) weatherization programs(s):

1. I certify that the above-listed property is my primary residence.
2. I (the Owner-Occupant or Tenant), grant the Contractor/Agency permission to enter my dwelling to perform assessments, conduct diagnostics, take photos only of weatherization work to be performed or deferred (as it relates to individual or whole house services), install feasible weatherization services and perform inspections in accordance with CSD weatherization program policies and standards to the above-listed dwelling.
3. I acknowledge that an assessment of my dwelling is necessary to determine the work that can be performed and that the work that is available may be limited due to the needs and condition of my residence. Identified work may not be provided if it does not meet all program requirements and specifications and may lead to full or partial deferral of work. My refusal of certain work may prevent the installation of other identified work in accordance to program requirements.
4. I hereby release and pledge to hold harmless the Contractor/Agency listed below, and its staff, from any liability in connection with the work identified on a summarized list, except as a consequence of gross negligence or willful and wanton misconduct.
5. I authorize the Contractor/Agency to access my utility company records to obtain only energy usage data for a period of one year before and two years after weatherization measures are installed.
6. I grant the Contractor/Agency, local, State and/or Federal inspectors permission to enter the dwelling after reasonable notice to perform inspections to verify the existence and quality of work performed by the Contractor/Agency and compliance with local, State, and/or Federal building codes and programmatic guidelines and acknowledge that a permit may be required for specific weatherization work. I understand that I may be held financially responsible for the weatherization work if I refuse to allow access for inspection and permitting purposes.
7. I shall not remove any permanently installed energy conservation measures unless they are damaged or no longer functional in the residence from where they were installed.

Additional Certifications For Owner-Occupants ONLY:

8. I acknowledge and agree that this property is not for sale at the time of qualifying for the program and will not be offered for sale or otherwise distributed for at least sixty days following the completion of weatherization services.
9. Mobile home units only: I acknowledge that I may not receive services that require a permit if the registration on the mobile unit is not up-to-date.

Additional Certifications For Tenants ONLY:

10. I acknowledge that the Rental Property Owner must grant the Contractor/Agency the same permissions by signing CSD 515B Energy Service Agreement for Rental Property Owner before any services are rendered.

ENERGY SERVICE AGREEMENT FOR OCCUPANT

11. I understand that the Property Owner cannot raise the rent of the unit for a period of two years from the date of weatherization because of the increased value of the unit due solely to weatherization measures provided by the Contractor/Agency (allowable factors for rent increase include an actual increase in property taxes, actual cost of amortizing other improvements to the property accomplished after the date of work completed by the Contractor/Agency, or actual increases in expenses of maintaining and operating this property).

12. I acknowledge that I have been provided a copy of this Agreement explaining its terms effective for a two year period after weatherization services have been completed. Complaint Process: In the event the provisions of this Agreement related to increased rent or the landlord's failure to decrease utility costs for master metered units are not met, tenants may contact the Contractor/Agency to submit a verbal or written complaint, which will be investigated by the Department of Community Services and Development. Contractor/Agency contact information is located on this Agreement under the section entitled, "Contractor/Agency Assurance."

13. I may retain the replacement energy conservation measure installed by the CSD weatherization program(s) if the replaced appliance was my personal property .

I CERTIFY THAT I am the Owner-Occupant or Tenant residing in the dwelling listed above that serves as my primary residence and that all given statements are true and correct to the best of my knowledge. I have read and understand these TERMS and RELEASE, and agree to be bound by all of its terms and conditions in order to receive weatherization services under the CSD weatherization program(s).

Owner-Occupant or Tenant's Signature	Date

Contractor/Agency Assurance

Contractor/Agency (Print name)	Address		
Contra Costa County	30 Muir Rd.		
CSLB Number (if applicable)	City	ZIP Code	Contractor/Agency Telephone Number
	Martinez	94553	925-674-7214
Contractor/Agency Email Address			Contractor/Agency FAX Number
Weather@DCD.cccounty.us			925-646-9339

The Contractor/Agency agrees to the following:

1. Shall be responsible for the feasible cost of weatherization measures performed other than cash contribution from the Owner or Owner Agent, if applicable, and any subsequent non-compliance.
2. Shall ensure that the Contractor/Agency is properly insured.
3. Shall ensure that work is conducted in a professional manner and meets program and building code standards.
4. Shall not make any significant structural changes to the dwelling without requesting written permission specifically describing the change from the dwelling owner.
5. Shall provide in writing a list of all weatherization measures installed in the unit.
6. Shall assure that the owner, or owner's agent, and tenant data shall be maintained in a confidential manner to assure compliance with the Information Practices Act of 1977, as amended, and the Federal Privacy Act of 1974, as amended.

Agency Program Manager's Signature	Agency Program Manager's Name (Print name)	Date
Laura Glass	Laura Glass	2020

STATE OF CALIFORINA
DEPARTMENT OF COMMUNITY SERVICES AND DEVELOPMENT
CSD 515B (Rev. 2/12/16)

ENERGY SERVICE AGREEMENT FOR RENTAL PROPERTY OWNER

Single-Family/Mobile Home Dwelling Information

Tenant Name	Dwelling Address	
City	Zip Code	Type
		Single ☐ Mobile ☐

Multi-Family Dwelling/Complex Information

Number of Eligible Buildings in Complex:		Use additional pages, if necessary.

Building #1

Complex/Building Name (if applicable)		Building Address		
City	ZIP Code	# of Units in Building	# of Units to be Weatherized	# of Vacant & Unqualified Units
List Qualified Units		List Vacant and Unqualified Units		

Building #2

Complex/Building Name (if applicable)		Building Address		
City	ZIP Code	# of Units in Building	# of Units to be Weatherized	# of Vacant & Unqualified Units
List Qualified Units		List Vacant and Unqualified Units		

Building #3

Complex/Building Name (if applicable)		Building Address		
City	ZIP Code	# of Units in Building	# of Units to be Weatherized	# of Vacant & Unqualified Units
List Qualified Units		List Vacant and Unqualified Units		

Owner and Owner's Agent Information

Owner (Print or type name)		Address	
Apt./Unit No.	City	ZIP Code	Owner Telephone Number
Owner Email Address			Owner FAX Number

If the Owner uses an agent for the above-referenced property, complete both Owner and Agent information.

Agent (Print or type name)		Address	
Apt./Unit No.	City	ZIP Code	Agent Telephone Number
Agent Email Address			Agent FAX Number

ENERGY SERVICE AGREEMENT FOR RENTAL PROPERTY OWNER

Owner or Owner's Agent Acceptance of Terms for CSD Weatherization Services
(to be completed by the Owner or Owner's Agent)

I agree to accept all of the following TERMS required for my rental property to receive services from the Department of Community Services and Development (CSD) weatherization program(s):

1. I certify that I am the Owner (or Owner's Agent) of the above-listed rental property.
2. I grant the Contractor/Agency permission to enter my property to perform assessments, conduct diagnostics, take photos only of weatherization work to be performed or deferred (as it relates to individual or whole house services), install feasible weatherization measures and perform inspections in accordance with CSD weatherization program policies and standards to the above-listed rental property.
3. I acknowledge that an assessment of my property is necessary to determine the work that can be performed and that the work that is available may be limited due to the needs and condition of my property. Identified work may not be provided if it does not meet all program requirements and specifications and may lead to full or partial deferral of work. My refusal of certain work may prevent the installation of other identified work in accordance to program requirements.
4. I shall not remove any energy conservation measures unless they are damaged or no longer functional in the rental property from where they were installed. If the replaced item (i.e. refrigerator or other appliance) was the personal property of my tenant, the tenant shall retain the replacement energy conservation measure installed by the CSD weatherization program(s).
5. Mobile home units only: I acknowledge that my property may not receive services that require a permit if the registration is not up-to-date.
6. I hereby release and pledge to hold harmless the Contractor/Agency listed below, and its staff, from any liability in connection with any work identified on a summarized list except as a consequence of gross negligence or willful and wanton misconduct.
7. I authorize the Contractor/Agency to access my complex's utility company master-metered records to obtain only energy usage data for a period of one year before and two years after weatherization measures are installed.
8. I grant the Contractor/Agency, local, State and/or Federal inspectors permission to enter the dwelling after reasonable notice to perform inspections to verify the existence and quality of work performed by the Contractor/Agency and compliance with local, State, and/or Federal building codes and programmatic guidelines and acknowledge that a permit may be required for specific weatherization work. I understand that I may be held financially responsible for the weatherization work if I refuse to allow access for inspection and permitting purposes.
9. I certify that I, as the Owner or Owner's Agent, shall ensure that gas or electric service, or both, that is provided by a master-meter to tenants shall be charged at the utilities' costs in accordance with California Public Utilities Commission Code Section 739.5 or other applicable government regulations.
10. I certify that I, as the Owner or Owner's Agent, shall not raise the rent of any weatherized unit for a period of two years from the date of weatherization because of the increased value of the unit due solely to weatherization measures provided (allowable factors for rent increase include an actual increase in property taxes, actual cost of amortizing other improvements to the property accomplished after the date of work completed by the Contractor/Agency, or actual increases in expenses of maintaining and operating this property).
11. I acknowledge and agree that this property is not for sale at the time of qualifying for the program and will not be offered for sale or otherwise distributed for at least sixty days following the completion of weatherization services.
12. I certify that I shall provide a copy of this Agreement explaining its terms to all tenants and subsequent tenants residing in the unit within the two year period. Complaint Process: In the event the provisions of this Agreement related to increased rent or the landlord's failure to decrease utility costs for master metered units are not met, tenants may contact the Contractor/Agency to submit a verbal or written complaint, which will be investigated. Contractor/Agency contact information is located on this Agreement under the section entitled, "Contractor/Agency Assurance."

Additional Certification for Unoccupied Multi-Unit Dwellings ONLY:

13. I agree that "rent" is defined as the tenant's monthly payment to the Owner (non-subsidized housing) or the contract rent (subsidized housing).
14. I shall submit to the Contractor/Agency a schedule of rents prior to commencement of work.
15. Federal, State or Local Government Rehabilitation Projects only: I certify that if a vacant unit is counted as being an eligible household for purposes of meeting the minimum threshold for whole building weatherization (66% rule), then the unit will become occupied by an eligible family within 180 days after the completion of weatherization (CFR 440.22(b)(2)(ii)).

STATE OF CALIFORINA
DEPARTMENT OF COMMUNITY SERVICES AND DEVELOPMENT
CSD 515B (Rev. 2/12/16)

ENERGY SERVICE AGREEMENT FOR RENTAL PROPERTY OWNER

I CERTIFY THAT I am the Owner or Owner's Agent of the Dwelling or Complex listed above, and that all given statements are true and correct to the best of my knowledge. I have read and understand these TERMS and RELEASE, and agree to be bound by all of its terms and conditions in order for my property to receive weatherization services under the CSD weatherization program(s).

Owner's (or Owner's Agent's) Signature	Date

Contractor/Agency Assurance

Contractor/Agency (Print or type name)		Address	
Contra Costa County		30 Muir Rd.	
CSLB Number (if applicable)	City	ZIP Code	Contractor/Agency Telephone Number
	Martinez	94553	925-674-7214
Contractor/Agency Email Address			Contractor/Agency FAX Number
Weather@DCD.cccounty.us			925-646-9339

The Contractor/Agency agrees to the following:

1. Shall be responsible for the feasible cost of weatherization measures performed other than cash contribution from the Owner or Owner Agent, if applicable, and any subsequent non-compliance.
2. Shall ensure that the Contractor/Agency is properly insured.
3. Shall ensure that work is conducted in a professional manner and meets program and building code standards.
4. Shall not make any significant structural changes to the dwelling without requesting written permission specifically describing the change from the dwelling owner.
5. Shall provide in writing a list of all weatherization measures installed in the rental unit.
6. Shall assure that the owner, or owner's agent, and tenant data shall be maintained in a confidential manner to assure compliance with the Information Practices Act of 1977, as amended, and the Federal Privacy Act of 1974, as amended.

Contractor/Agency Program Manager's Signature	Contractor/Agency Program Manager's Name (Print name)	Date
Laura Glass	Laura Glass	2020

Required Documentation:

Rent schedule received from Property Owner, if applicable?	Y	N	If applicable, CSD 75 completed?	Y	N

ENERGY SERVICE AGREEMENT FOR RENTAL UNITS – Wall Insulation
Contra Costa County agrees to provide certain program services at no cost the following owner's dwelling unit:

Owner Name: (print or type name): _____
Tenant Name: (print or type name): _____

Service Address:_____Unit No:_____

City:_____ Zip Code_____ Phone_____

If your unit qualifies for wall insulation:

1. ***The insulation company will drill a minimum of two 2" holes per stud bay. Please see diagram below;***

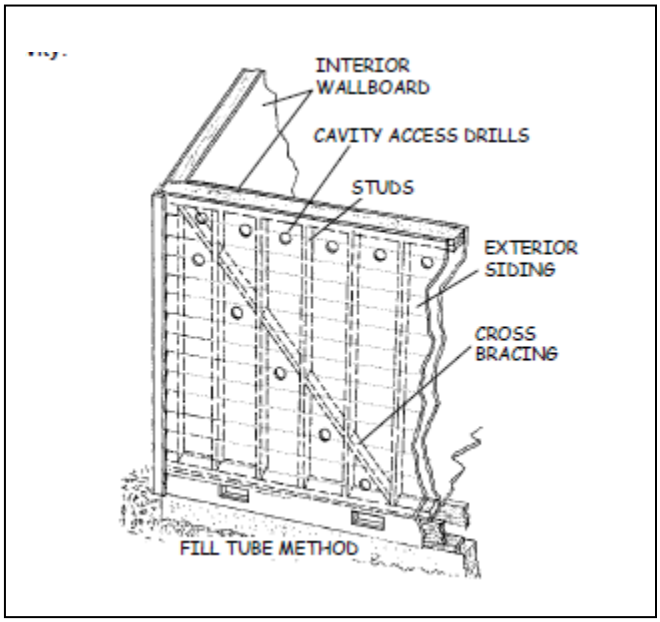

2. ***The insulation company will then blow in the appropriate insulation.***

3. ***The insulation company will do a rough first patch/filling.***

4. ***The property owner will be responsible for the following:***

   - ***Provide 3 feet of clearance to all exterior walls from inside or outside, (this will be determined by the insulation company)***
   - ***Have all wall decorations removed prior to insulation being installed***
   - ***Be responsible for the final patching including but not limited to filling, painting, texturing, etc***

Must Check one Box

☐ ***I agree to have wall insulation installed in my unit***

☐ ***I do not agree to have wall insulation installed in my unit. The fact that I do not want wall insulation installed in my unit will not affect any other measures that I qualify for with this program.***

_____ _____
Property owners signature Date

Contractor: CONTRA COSTA COUNTY WEATHERIZATION PROGRAM

Address: 30 MUIR RD

City/State: MARTINEZ, CALIFORNIA Zip Code: 94553

Program manager's signature: Laura Glass Date: 2020

Contra Costa County/Department of Conservation and Development
Weatherization Program

ENERGY SERVICE AGREEMENT FOR RENTAL UNITS – Mechanical Ventilation

Contra Costa County/ Department of Conservation and Development agrees to provide certain program services at no cost to the owner's dwelling unit:

Tenant (print or type name): _____
Address: _____Apt/Unit No:_____
City:_____Zip code:_____
Tenant's Telephone Number:_____Complex Name: _____

Tenant's signature: _____Date:_____

Owner (print or type name): _____
Owner's Address: _____
City:_____Zip code:_____
Owner's Telephone Number: _____

Owner's (or Owner's Agent's) Signature:_____ Date:_____

Mechanical ventilation is a controlled airflow throughout the home to refresh the air quality. Mechanical ventilation is installed to eliminate airborne pollutants that may cause health issues such as:

- carbon monoxide
- radon
- excessive moisture

In the process of installing mechanical ventilation the subcontractor will need to cut a 4 to 8 inch hole in an exterior wall of your unit. The subcontractor will then place a continuous or intermittent fan on the inside wall that will vent to the exterior of the unit.

☐ I agree to the installation of mechanical ventilation in my unit.

☐ I do not agree to the installation of mechanical ventilation in my unit.

Contractor: CONTRA COSTA COUNTY WEATHERIZATION PROGRAM

Address: 30 Muir Dr.

City/State: MARTINEZ, CALIFORNIA Zip Code: 94553

Program manager's signature: *Laura Glass* Date: 2020

Department of Conservation and Development

30 Muir Road
Martinez, CA 94553

Weatherization Program

Phone: (925) 674-7214
Fax: (925) 646-9339
Email: Weather@DCD.cccounty.us

Contra Costa County

John Kopchik
Director

Aruna Bhat
Deputy Director

Jason Crapo
Deputy Director

Maureen Toms
Deputy Director

Kelli Zenn
Business Operations Manager

Date_____

Subj: POST WEATHERIZATION LEAD PRESENCE TEST

A test for the presence of lead will be conducted on all areas of your residence where the paint was disturbed. The cost for this test is between $200.00 and $400.00

☐ I do wish to pay for this test.

☐ I do not wish to pay for this test.

It is understood that this test will be performed whether I pay for this test or not.

_____
Property Owner's Name (Please print)

_____
Property Owner's Signature