Appendix N: Preliminary Drainage Study

PRELIMINARY DRAINAGE STUDY

for

BALL ESTATES

SUBDIVISION 9338

3/29/2018

Aliquot Associates Inc.

1390 S. Main Street, Suite 310

Walnut Creek, CA 94596
Robert Wong, P.E. 43748

Table of Contents

Executive Summary

Figure 1	**Site Location and Boundary**
Figure 2	**Pre-Development Drainage Area Map**
Figure 2A	**Pre-Development Runoff Coefficient Table**
Figure 3	**Post-Development Drainage Area Map**
Figure 3A	**Post-Development Runoff Coefficient Table**
Figure 4	**R-20 Comparison to 1969 Calculation**
Figure 5	**Tentative Map Grading Plan & On-Site Drainage Areas**
Figure 6	**Erosion Control Plan**
Figure 7	**Erosion Control Details**

Appendix A: Rational Method Hydrology and Hydraulic Calculations-Camille Avenue System

Appendix B: San Ramon Creek Hydrograph Analysis

Description of Project:

The proposed project is a single family detached, R-20 subdivision, consisting of a 35 lot, gated community, in the Alamo area west of Danville Blvd. lying within the unincorporated area of Contra Costa County. The 60.5 acre project (see Figures 1 and 5) consists of a 21.7 acre development site along with 38.8 acres of Open Space. The Mean Annual Precipitation (M.A.P.) at the site is 24 inches.

Existing Conditions:

The 21.7 acres development site ("Development Site") is located at the foot of Las Trampas Ridge. The property consists of an existing estate home, a barn, and an office building with parking. There are 3 watersheds, which flow to the Development Site, the largest extending to Las Trampas Ridge with an elevation difference of nearly 1,000 feet. The 3 separate watersheds hAvenue been designated as I, II, and III (see Figure 2). A large 48" to 60" culvert exists in Camille Avenue Areas II and III currently flow to this pipe ("Camille Avenue system"). The Camille pipe crosses Danville Blvd. and eventually outlets into San Ramon Creek.

Area I

Area I is a 28.31 acre watershed commencing at the western line of the open space. It enters the Development Site in the northern orchard on the property. Flow from Area I, west of the Development Site, is not in a defined channel as it leaves the open space into the orchard. It continues as sheet flow across the orchard into a flat swale to the end of Ironwood Place, where it enters a catch basin in the street. Historically, the sheet flow discharged at the NE corner of the orchard into an earthen ditch. By field observation, once the flow left the site it continued in a ditch which traverses easterly, along the rear property lines of 3 lots north of Irongate Court, then according to the County's Drainage Inventory Map continued northeasterly, along a ditch system, eventually to a 30" pipe at Hemme Avenue and the Ironhorse Trail, then east to San Ramon Creek. Two 15" pipes exist at the eastern property line of the orchard, which apparently were extended for future development of this project. Presently, these pipes are buried and drainage from the orchard does not enter them. If used these pipes would flow to existing Irongate Court then to a ditch in the rear yards of the lots fronting Irongate Court to the east. In reviewing the plans of the Iron Gate Subdivision, the plans show the ditches behind these existing homes are flat, designed at 0% slope. The dispersion of water was planned to flow into 6" holes in the ditch, then into dry wells and infiltrate into the soil. This system is inadequate. Owners hAvenue confirmed during neighborhood meetings that the drainage is very poor. Due to its inadequacy, drainage from the project in the orchard will be routed to the Camille Avenue system. A small quantity of the orchard drainage will continue to flow through the Irongate system via the existing catch basins in Ironwood Place, but will not increase flow.

Area II

Area II has the largest watershed area flowing through the project. It commences at Las Trampas Ridge, flows through EBRPD lands and the project's open space, then through the Development Site within a small stream. Although Area II is the largest watershed through the project, it is a relatively small basin area of approximately 157 acres. The small stream continues through the project and is presently collected and conveyed through the Camille Avenue system on the east side of the project near the end of Camille. The Camille Avenue system begins at a concrete headwall/ drop structure at the upper end of Camille Avenue about 50 ft. into the project. A 48" storm drain pipe exits the structure and further downstream at Escondido Ct. and Camille Avenue, the pipe diameter increases to 60" and outlets into San Ramon Creek.

The Camille Avenue system was designed in 1969 based on the old General Plan and zoning at that time, using calculations that considered the entire drainage area up to Las Trampas Ridge as R-20 zoning. This includes the project's dedicated open space and EPRPD lands. This project will develop only a small portion of the 157 acre drainage area and dedicate the remainder of the property to open space. The portion of the drainage area above the project boundary is owned by East Bay Regional Park District and will also be open space in the future. Therefore the majority of the drainage area will hAvenue a runoff factor less than 0.49 affording more capacity in the Camille Avenue system (see Figure 4 for comparison of R-20 areas).

Area III

The Area III watershed consists of 27.28 acres of land that contributes runoff through the site before entering the Camille Avenue system at Escondido Ct. Beginning in EBRPD lands, it flows in a small creek along the southern border of the Development Area, into the site, collected in a rock headwall and dispersed in the S.E. orchard; it then sheet flows to a 10" outlet pipe at the southeast corner of the orchard. The drainage continues across Camille lane through a ditch then a series of pipes before entering the Camille Avenue system at the intersection of Escondido Ct. Increased flows from the project in the SE orchard and lots above in the office area will not continue through the 10" pipe. Only pre-project flows will drain to the 10" pipe crossing Camille Lane. The post-project increase will be routed to the Camille Avenue system.

Proposed Development:

The proposed development will route portions of on-site runoff from Area I and from Area III to the Camille Avenue system. Hydraulic calculations of the Camille Avenue system show the 48" and 60" pipes as adequate. As discussed in the Existing Conditions section of this report, the pipes were originally sized for upland drainage areas which were zoned for R-20 development, much more dense than the current condition. The 2005 General Plan now shows these uplands as open space. The existing pipes in Camille Avenue are adequate to carry post-project flows with the required freeboard at all drainage structures.

All of the runoff from Area III is routed directly to the Camille Avenue system through storm drain pipes to point CB2 (see Figure 3). This re-routes a total of 27.28 acres to the Camille Avenue system.

On-site runoff from Area I as well as the upper drainage area that is tributary (total of 27.07 acres) will be rerouted from the northern orchard to the Camille Avenue system with the exception of drainage area B1a (Figures 2 and 3). Area B1a will be routed into a catch basin at the end of Ironwood place that flows to Hemme and thus maintains the pre-project flow pattern. The routing of the 27.07 acres of flow is to avoid its historic pattern through the existing, marginal, off-site system to Hemme. This rerouting to Camille will avoid the inadequate system through rear yards of the homes fronting Iron Gate Court on the east.

Area II will continue to drain through the project within the existing creek to the Camille Avenue system as it historically has flowed.

During construction, which is anticipated to last up to 10 years, erosion control measures designed to slow runoff and increase infiltration will be implemented. Figures 6 and 7 show the erosion control plan that is to be implemented during construction.

We considered the employment of a detention basin to mitigate flows from the project. Hydrographs were produced for both the project, using a detention basin, and San Ramon Creek where the Camille Avenue system outlets into the creek. Plotting the hydrographs, overlaying each one, the comparison demonstrates that the increased post-peak runoff from the detention basin coincides with the peak flows in San Ramon Creek and therefore increases the San Ramon flows at peak occurrence (See Appendix B). Although this is not significant, it is nonetheless increasing the creek flows in a creek with historic flooding. A detention basin is not planned for this project. A project detention basin would exasperate flows in San Ramon Creek.

Conclusions:

Runoff from the proposed development is adequately contained in the existing storm drain system from Camille Avenue to San Ramon Creek. No attenuation was assumed to occur from the bioretention facilities although their sizing is intended to mitigate post-development peak flows for storms at and below the 10-year recurrence interval. The Contra Costa County Public Works Division required a flood control analysis to prove that the downstream drainage facilities are adequately sized for potential increases in the flow rates leaving the site, without considering the effect of bio-retention facilities. It is conservative to view a worst case scenario and assume no mitigating factors, such as flow control Integrated Management Practices (IMPs). The Regional Water Quality Control Board required flow control IMPs to mitigate potential cumulative impacts from increased flow rates. While this report only addresses the flood control aspect, it is important to recognize that the flow control aspect is also addressed in separate documents.

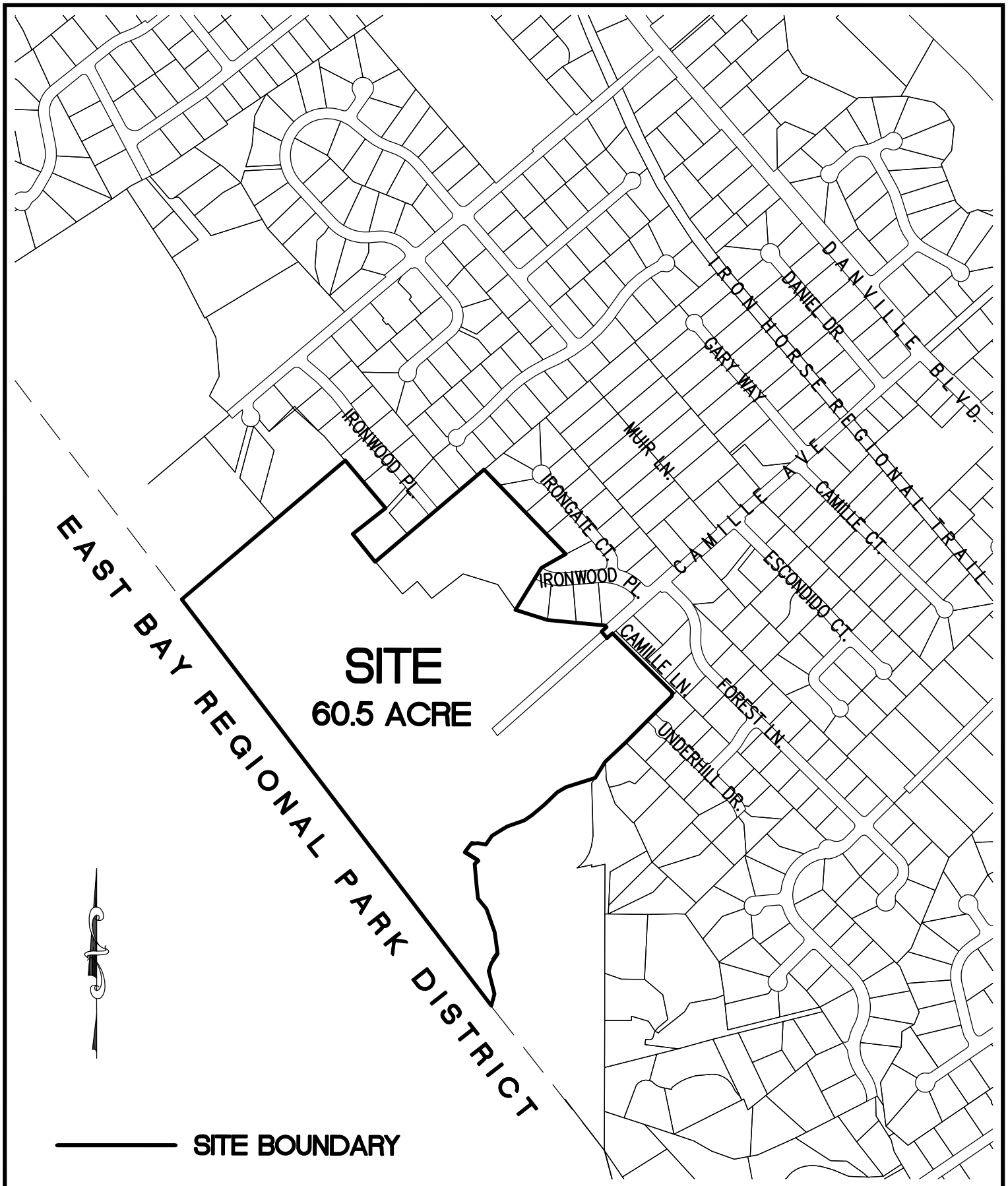

ALIQUOT

Planners
Civil Engineers
Surveyors

Aliquot Associates, Inc.
1390 S. Main St. - Ste. 310
Walnut Creek, CA 94596
Telephone: (925) 476-2300
Fax: (925) 476-2350

Subject FIGURE 1: SITE LOCATION & BOUNDARY
Job No. 201032.40 Scale NOT TO SCALE
By FW Date 2013-03-24 Chkd. -
SHEET 1 OF 1

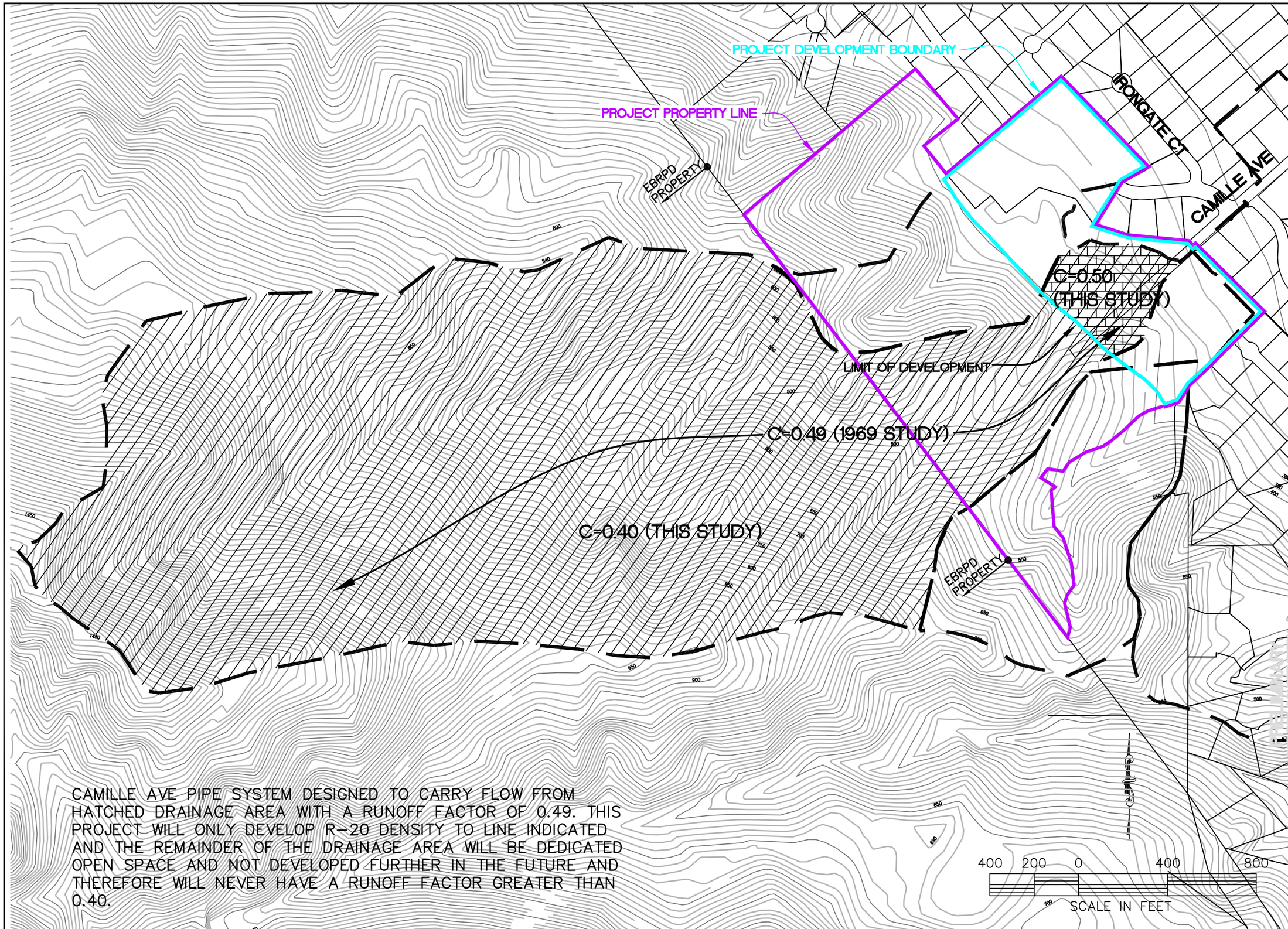

ALIQUOT
Aliquot Associates, Inc.
1390 S. Main St. - Ste. 310
Walnut Creek, CA 94596
Telephone: (925) 476-2300
Fax: (925) 476-2350
Planners
Civil Engineers
Surveyors

No.	BY	DATE	REVISIONS

R-20 COMPARISON TO 1969 CALCULATION

SUBDIVISION 9338 - 333 CAMILLE AVENUE

ALAMO CONTRA COSTA COUNTY CALIFORNIA

JOB NO 201032
SCALE 1"=400'
DATE 4/30/13
DESIGN MC
DRAWN
APPROVED

DRAWING NUMBER

FIGURE 4

1 OF 1

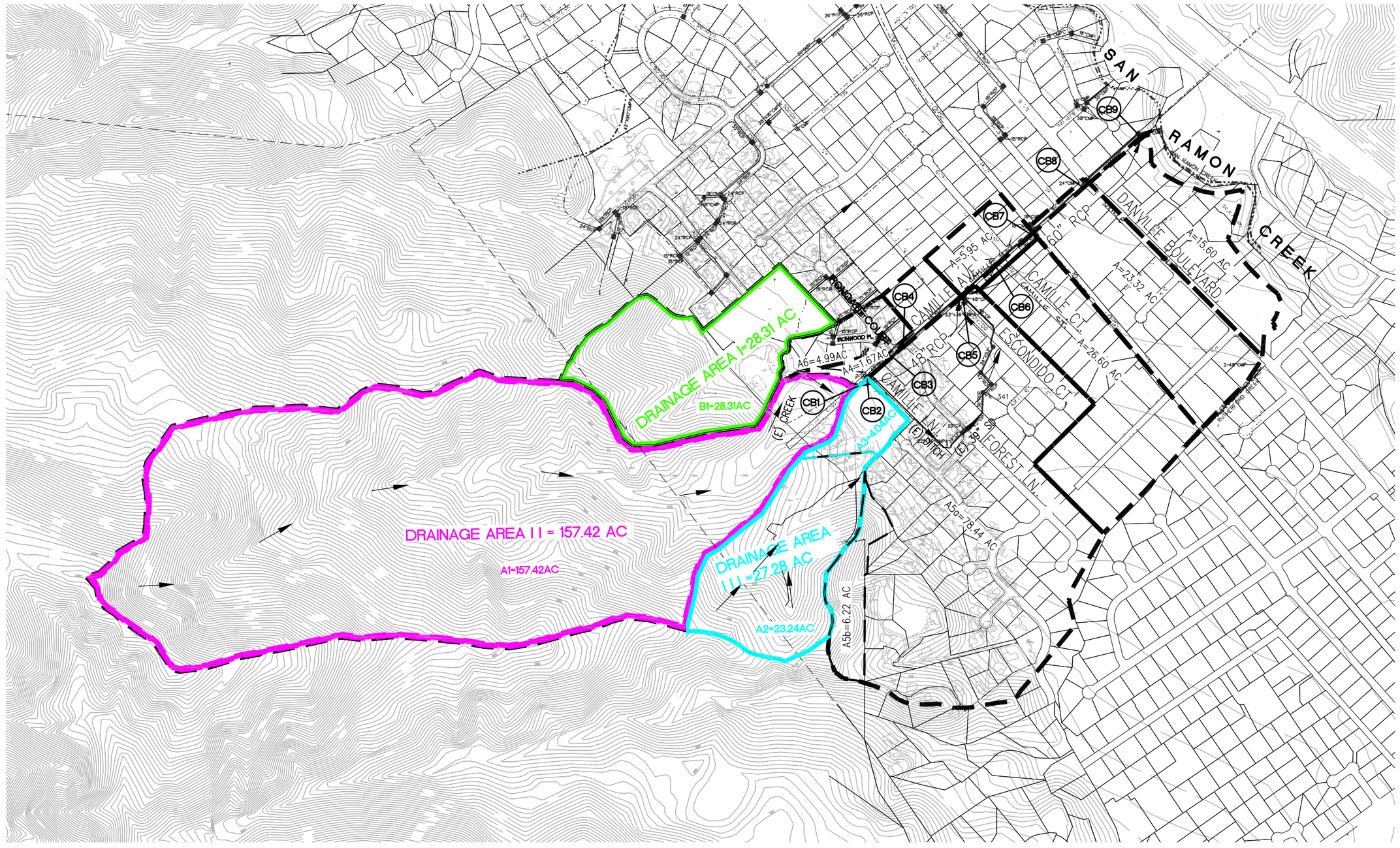

LEGEND:

- SITE BOUNDARY
- DRAINAGE BOUNDARY (TO SYSTEM NORTH OF CAMILLE AVE SYSTEM)
- DRAINAGE BOUNDARY (TO ESCONDIDO CT AND THEN TO CAMILLE AVE SYSTEM)
- DRAINAGE BOUNDARY (TO CAMILLE AVE SYSTEM)

0 300 600 900

(IN FEET)
1 inch = 300 ft.

ALIQUOT
PLANNERS
CIVIL ENGINEERS
SURVEYORS
1390 SOUTH MAIN STREET
SUITE 310
WALNUT CREEK, CA. 94596
(925) 476-2300
FAX (925) 476-2350

No.	BY	DATE	REVISIONS

FIGURE 2
PRE-DEVELOPMENT DRAINAGE MAP
SUBDIVISION 9338 - 333 CAMILLE AVENUE

ALAMO CONTRA COSTA COUNTY CALIFORNIA

JOB NO 201032.4
SCALE 1"=300'
DATE 2/3/2016
DESIGN
DRAWN MC
APPROVED

DRAWING NUMBER
FIGURE 2
1 OF 1

PRE-DEVELOPMENT RUNOFF COEFFICIENT TABLE		
DRAINAGE AREA (ACRE)	LAND USE	RUNOFF COEFFICIENT
A1=157.42	OPEN SPACE	0.4
A2=23.24	OPEN SPACE	0.4
A3=4.04	OPEN SPACE	0.4
A4=1.67	R-20	0.5
A5a=78.44	R-20	0.5
A5b=6.22	OPEN SPACE	0.4
A6=4.99	R-20	0.5
B1=28.31	OPEN SPACE	0.4

FIGURE 2A

ALIQUOT

Planners
Civil Engineers
Surveyors

Aliquot Associates, Inc.
1390 S. Main St. - Ste. 310
Walnut Creek, CA 94596

Telephone: (925) 476-2300
Fax: (925) 476-2350

Subject PRE-DEVELOPMENT RUNOFF COEFFICIENT
Job No. 201032.40 Scale NOT TO SCALE
By FW Date 2016-02-03 Chkd. -
SHEET 1 OF 1

P:\201\201032\Hydrology\Figure 2a_Pre Runoff Coeff.dwg, 2/17/2016 3:37:52 PM, Adobe PDF

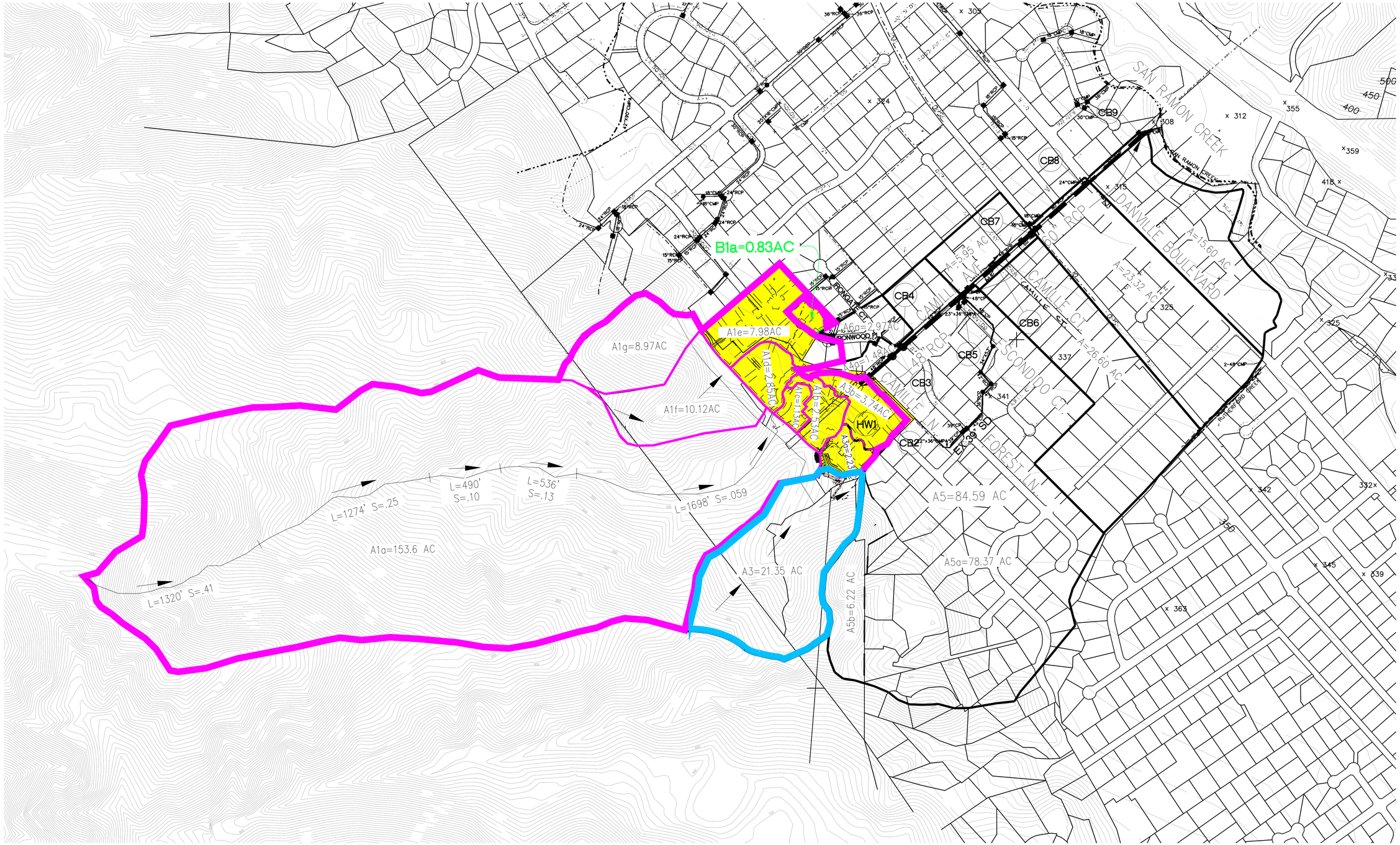

LEGEND:

	SITE
	DRAINAGE BOUNDARY (TO SYSTEM NORTH OF CAMILLE AVE SYSTEM)
	DRAINAGE BOUNDARY (TO ESCONDIDO CT AND THEN TO CAMILLE AVE SYSTEM)
	DRAINAGE BOUNDARY (TO CAMILLE AVE SYSTEM)
A1a=152.9 AC	DRAINAGE AREA IN ACRES

0 300 600 900

(IN FEET)
1 inch = 300 ft.

ALIQUOT
PLANNERS
CIVIL ENGINEERS
SURVEYORS
1390 SOUTH MAIN STREET
SUITE 310
WALNUT CREEK, CA. 94596
(925) 476-2300
FAX (925) 476-2350

No.	BY	DATE	REVISIONS

FIGURE 3
POST-DEVELOPMENT DRAINAGE MAP
SUBDIVISION 9338 - 333 CAMILLE AVENUE

ALAMO CONTRA COSTA COUNTY CALIFORNIA

JOB NO 201032.4
SCALE 1" = 300'
DATE 8/30/2017
DESIGN
DRAWN MC
APPROVED

DRAWING NUMBER
FIGURE 3
1 OF 1

POST-DEVELOPMENT RUNOFF COEFFICIENT TABLE		
DRAINAGE AREA (ACRE)	LAND USE	RUNOFF COEFFICIENT
A1a=153.6	OPEN SPACE	0.4
A1b=2.53	R-20	0.5
A1c=1.13	R-20	0.5
A1d=2.85	R-20	0.5
A1e=7.98	R-20	0.5
A1f=10.12	OPEN SPACE	0.4
A1g=8.97	OPEN SPACE	0.4
A3=21.35	OPEN SPACE	0.4
A3a=2.23	R-20	0.5
A3b=3.74	R-20	0.5
A4a=1.48	R-20	0.5
A5a=78.37	R-20	0.5
A5b=6.22	OPEN SPACE	0.4
A6a=2.97	R-20	0.5
B1a=0.83	R-20	0.5

FIGURE 3A

ALIQUOT

Planners
Civil Engineers
Surveyors

Aliquot Associates, Inc.
1390 S. Main St. - Ste. 310
Walnut Creek, CA 94596
Telephone: (925) 476-2300
Fax: (925) 476-2350

Subject POST-DEVELOPMENT RUNOFF COEFFICIENT
Job No. 201032.40 Scale NOT TO SCALE
By FW Date 2016-02-03 Chkd. -
SHEET 1 OF 1

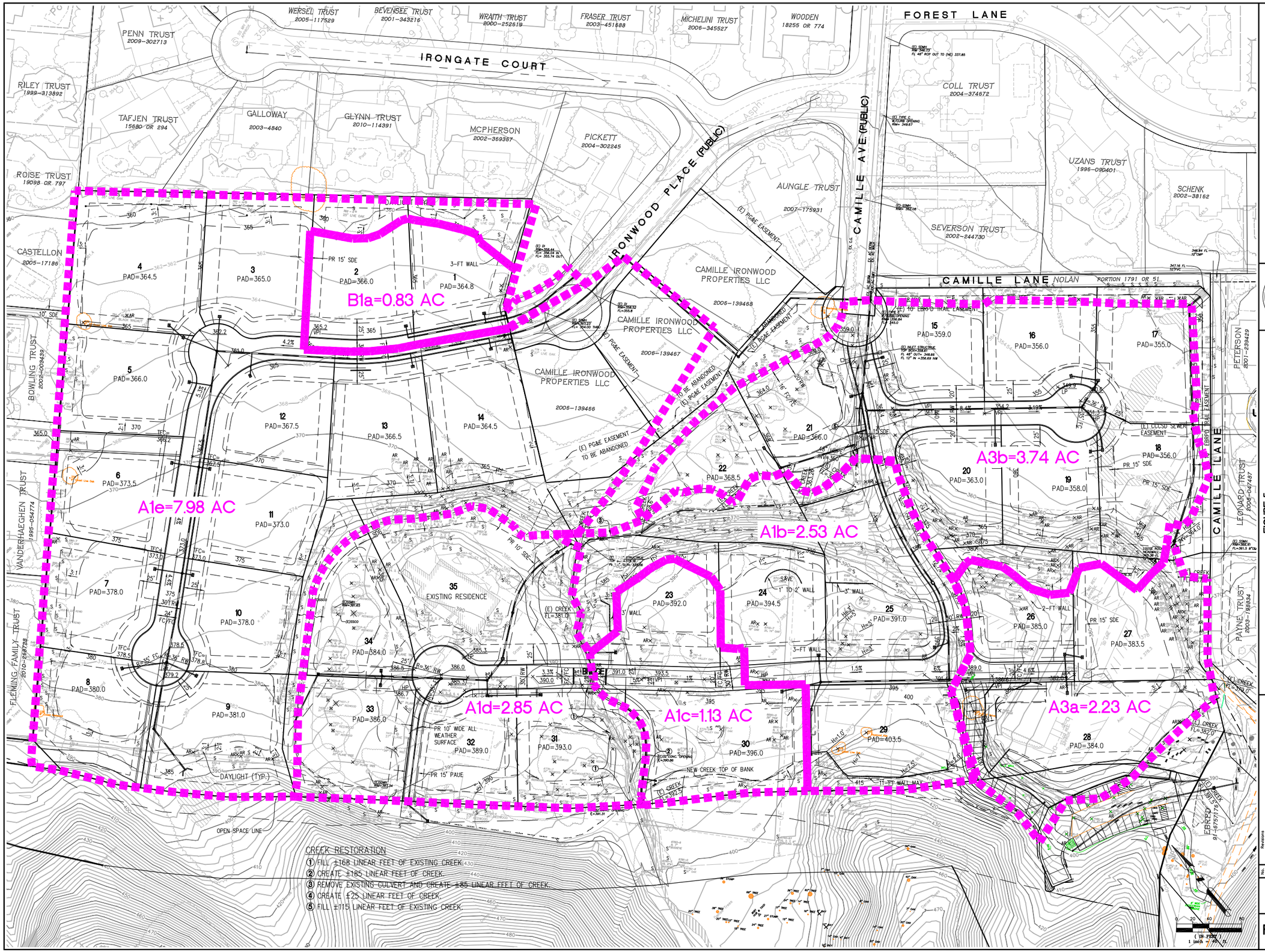

Alliquot Associates, Inc.
1390 S. Main St. - Ste. 310
Walnut Creek, CA 94596
Telephone: (925) 476-2300
Fax: (925) 476-2350

Planners
Civil Engineers
Surveyors

ALIQUOT

FIGURE 5
BALL ESTATES
GRADING AND DRAINAGE PLAN
SUBDIVISION 9338 - 333 CAMILLE AVENUE
CONTRA COSTA COUNTY
ALAMO
CALIFORNIA

No.	Revisions

Date 8/30/2017
Scale 1"=40'
Design VJD/FW
Drawn FW
Approved RCW
Job No 201032

Drawing Number:
FIGURE 5
1 OF 1

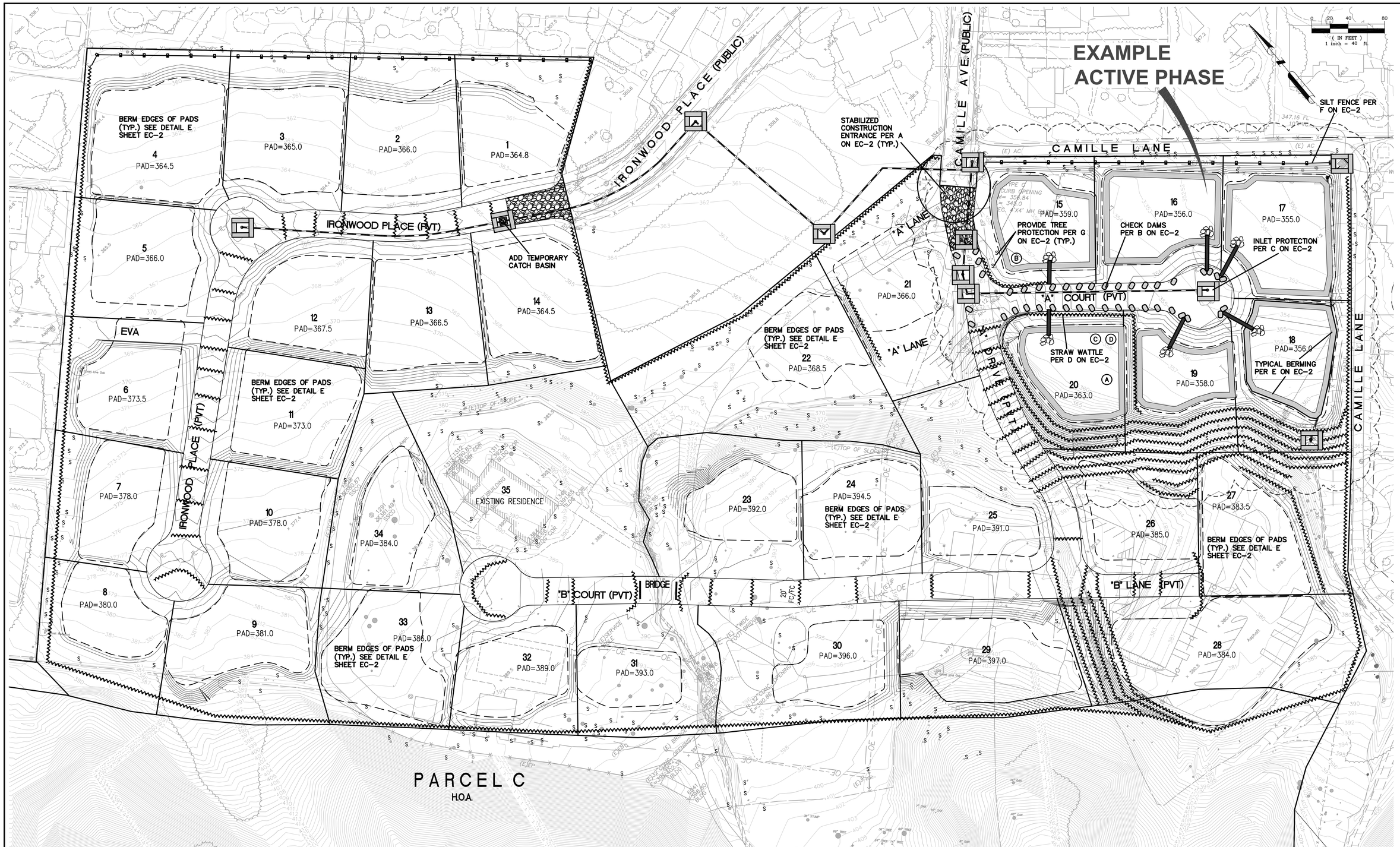

NOTES

1. BERM EDGES OF GRADED PADS TO PREVENT SILT-LADEN RUNOFF FROM TRAVELING ACROSS LOT LINES.
2. HYDROSEED ALL GRADED AND UNVEGETATED AREAS (SEE EC-2 FOR SUGGESTED MIX).
3. BIORETENTION PLANTERS AS SHOWN ON SHEET TM-8 TO BE INSTALLED WHEN STREETS ARE PAVED.
4. FOR INACTIVE PHASES USE WATTLE IN ROADWAYS. FOR ACTIVE PHASES USE CHECK DAMS (SEE B ON EC-2 FOR SPACING).
5. PROVIDE TREE PROTECTION WHENEVER WORK TAKES PLACE IN VICINITY OF TREES TO REMAIN, LABELED WITH 'S' ON THE TREE PROTECTION PLAN (NOTE THAT THE 'S' LABELS ARE REPRODUCED ON THIS PLAN, BUT THE OFFICIAL TREE PROTECTION PLAN AND ARBORIST REPORT SHALL SUPERSEDE THE LABELS ON THIS PLAN IF DIFFERENT). SEE G ON EC-2 FOR TREE PROTECTION DETAIL.
6. A QUALIFIED SWPPP PRACTITIONER (Q.S.P.) SHALL INSPECT AT REGULAR INTERVALS IN ACCORDANCE WITH THE NPDES CONSTRUCTION GENERAL PERMIT.
7. CONTRACTOR SHALL INSTALL EROSION CONTROL IMMEDIATELY AFTER GRADING IS COMPLETE.
8. ALL EROSION AND SEDIMENT CONTROL MEASURES SHALL BE CONSTRUCTED AND MAINTAINED IN ACCORDANCE WITH THE PROVISIONS OF THE ASSOCIATION OF BAY AREA GOVERNMENTS (ABAG) "MANUAL OF STANDARDS FOR EROSION AND SEDIMENT CONTROL MEASURES." CONTROL MEASURES ARE SUBJECT TO THE INSPECTION AND APPROVAL OF THE ENGINEERING DIVISION OF THE COUNTY PUBLIC WORKS PLANNING DEPARTMENT.
9. SHOULD OWNERSHIP OF ANY PORTION CHANGE, THE NEW OWNER MUST SUBMIT A NEW NOTICE OF INTENT (NOI) PACKAGE WITHIN 30 DAYS OF THE DATE OF CHANGE OF OWNERSHIP. FOR ONGOING CONSTRUCTION ACTIVITY INVOLVING A CHANGE OF OWNERSHIP, THE NEW OWNER MUST REVIEW THE EXISTING STORM WATER POLLUTION PREVENTION PLAN (SWPPP), DETERMINE IF IT IS APPROPRIATE FOR THE CONSTRUCTION ACTIVITY BEING UNDERTAKEN, AND CONFIRM IT IS IN COMPLIANCE WITH SECTION A OF THE CURRENT PERMIT. IF IT IS NOT IN COMPLIANCE, THEN THE SWPPP MUST BE AMENDED, OR A NEW SWPPP DEVELOPED, WITHIN 45-CALENDAR DAYS.

PHASING

1ST YEAR:
- FILE NOTICE OF INTENT (NOI) PER CONSTRUCTION GENERAL PERMIT PROVISIONS.
- CREATE STABILIZED CONSTRUCTION ENTRANCE AND DESIGNATE LOCATIONS FOR WASTE, PORTABLE TOILETS, AND DUMPSTERS (SHOWN AS ENCIRCLED 'A', 'B', 'C', AND 'D' ON THIS PLAN – SEE LEGEND).
- ROUGH GRADE ENTIRE SITE.
- IMPLEMENT EROSION CONTROL MEASURES CONCURRENTLY WITH OR IMMEDIATELY AFTER ROUGH GRADING ACTIVITIES.
- INSTALL MAIN STORM DRAIN LINES AS SHOWN ON THIS PLAN.
- MONITOR AND MAINTAIN ALL EROSION CONTROL PER NPDES CONSTRUCTION GENERAL PERMIT AND SITE STORMWATER POLLUTION PREVENTION PLAN (SWPPP).
- BEGIN CONSTRUCTION OF ACTIVE PHASE(S).
- STABILIZE ANY COMPLETED PHASE(S). REVISE SWPPP TO REFLECT COMPLETED PORTIONS.

2ND YEAR:
- CONTINUE TO MONITOR AND MAINTAIN SITE EROSION CONTROL MEASURES.
- BEGIN NEW PHASE(S) IF APPLICABLE.
- CLOSE OUT COMPLETED PHASES (AMEND SWPPP) WHEREVER FEASIBLE IN ACCORDANCE WITH THE CONSTRUCTION GENERAL PERMIT.

3RD THROUGH 10TH YEAR:
- CONTINUE TO MONITOR AND MAINTAIN SITE EROSION CONTROL MEASURES.
- BEGIN NEW PHASE(S) IF APPLICABLE.
- CLOSE OUT COMPLETED PHASES (AMEND SWPPP) WHEREVER FEASIBLE IN ACCORDANCE WITH THE CONSTRUCTION GENERAL PERMIT.
- FILE NOTICE OF TERMINATION (NOT) AT CONCLUSION OF CONSTRUCTION ACTIVITIES PER CONSTRUCTION GENERAL PERMIT.

LEGEND

- STRAW WATTLE (NO MONOFILAMENT NETTING SHALL BE USED)
- SILT FENCE
- INLET PROTECTION
- CHECK DAMS
- STABILIZED CONSTRUCTION ENTRANCE
- (A) CONSTRUCTION MATERIALS STORAGE AREA
- (B) HAZARDOUS MATERIALS STORAGE AREA (PROTECTED FROM ACTIVITY, SEALED AND WITHIN SECONDARY CONTAINMENT)
- (C) COVERED DUMPSTERS FOR NON-HAZARDOUS AND RECYCLABLE WASTE.
- (D) PORTABLE SANITARY SYSTEM

SEE EC-2 FOR DETAILS AND NOTES

CALL BEFORE YOU DIG
UNDERGROUND SERVICE ALERT
800-227-2600

THE CONTRACTOR SHALL NOTIFY UNDERGROUND SERVICE ALERT AND THE CITY PUBLIC WORKS DEPARTMENT AT LEAST 48 HOURS (2 WORKING DAYS) PRIOR TO BEGINNING ANY EXCAVATION IN THE VICINITY OF THE UNDERGROUND FACILITIES.

Aliquot Associates, Inc.
1390 S. Main St., Ste. 310
Walnut Creek, CA 94596
Telephone: (925) 476-2300
Fax: (925) 476-2350

Planners
Civil Engineers
Surveyors

ALIQUOT

REGISTERED PROFESSIONAL ENGINEER
No. 43748
Exp. Dec. 31, 2019
CIVIL
STATE OF CALIFORNIA

EROSION CONTROL PLAN
BALL ESTATES
SWPPP AFTER SITE GRADING
SUBDIVISION 9338 - 333 CAMILLE AVENUE
CONTRA COSTA COUNTY
ALAMO
CALIFORNIA

No.	Revisions

Date 1/30/2017
Scale AS SHOWN
Design VJD/FW
Drawn MS
Approved RCW
Job No 201032

Drawing Number:
6
6 OF 7

EROSION CONTROL NOTES:

1. TEMPORARY EROSION CONTROL DEVICES SHOWN ON GRADING PLAN WHICH INTERFERE WITH THE WORK SHALL BE RELOCATED OR MODIFIED WHEN THE INSPECTOR SO DIRECTS AS THE WORK PROGRESSES.
2. EXCEPT AS OTHERWISE DIRECTED BY THE INSPECTOR, ALL DEVICES SHOWN ON THE EROSION CONTROL PLAN SHALL BE IN PLACE AT THE END OF EACH WORKING DAY. ALL EROSION CONTROL FACILITIES MUST BE INSPECTED AND REPAIRED AT THE END OF EACH WORKING DAY.
3. ALL EROSION AND SEDIMENT CONTROL MEASURES SHALL BE CONSTRUCTED AND MAINTAINED IN ACCORDANCE WITH THE PROVISIONS OF THE ASSOCIATION OF BAY AREA GOVERNMENTS (ABAG) "MANUAL OF STANDARDS FOR EROSION AND SEDIMENT CONTROL MEASURES" AND THE SITE STORMWATER POLLUTION PREVENTION PLAN.
4. ALL LOOSE SOIL AND DEBRIS SHALL BE REMOVED FROM THE STREET AREAS UPON STARTING OPERATIONS AND PERIODICALLY THEREAFTER AS DIRECTED BY THE INSPECTOR. THE SITE SHALL BE MAINTAINED SO AS TO MINIMIZE SEDIMENT LADEN RUNOFF TO ANY STORM DRAIN SYSTEM.
5. THE CONTRACTOR SHALL PLACE 3"–4" FRACTURED STONE AGGREGATE AS A GRAVEL ROADWAY (6" MINIMUM THICKNESS FOR THE FULL WIDTH AND 50 FEET LONG) AT EACH ROAD ENTRANCE TO THE SITE. ANY MUD THAT IS TRACKED ONTO PAVEMENT SHALL BE REMOVED THE SAME DAY.
6. A CONCRETE WASHOUT IS REQUIRED FOR ALL CONCRETE WORK. THE WASHOUT SHALL CONSIST OF A CONTAINMENT AREA ENCLOSED BY AN EARTHEN DIKE. PLASTIC TARP, COVERING THE CONTAINMENT AREA AND EARTHEN DIKE, SHALL BE STAKED IN AT OUTSIDE EDGE OF EARTHEN DIKE.
7. ADDITIONAL CONTAINMENT METHODS MUST BE PROVIDED FOR ANY WASTE STORAGE AREA, STOCKPILE/MATERIAL STORAGE AREA AND/OR CONSTRUCTION TOILET AREA.
8. STAND–BY CREWS SHALL BE ALERTED BY THE PERMITTEE OR CONTRACTOR FOR EMERGENCY WORK DURING RAINSTORMS.
9. ALL EROSION CONTROL MEASURES WILL BE INSPECTED BEFORE, DURING, AND AFTER EACH STORM. BREACHES IN DIKES AND SWALES WILL BE REPAIRED PRIOR THE CLOSE OF EACH DAY AND WHENEVER RAIN IS FORECAST.
10. TO MINIMIZE EROSION OF GRADED BANKS, ALL GRADED BANKS STEEPER THAN 2% AND HIGHER THAN 3 FEET, SHALL BE HYDROSEEDED, LANDSCAPED, OR SEALED. TEMPORARY DITCHES AND BERMS SHALL BE CONSTRUCTED TO CONTAIN THE STORM WATER AND DIRECT IT, IN A MANNER THAT AVOIDS EROSION OF THE BANKS, TO THE EROSION AND SEDIMENT CONTROL FACILITIES.
11. ALL CUT AND FILL SLOPES ARE TO BE PROTECTED TO PREVENT OVERBANK FLOW USING EARTHEN BERMS, WATTLE, OR SILT FENCES.
12. ALL GRADED AREAS, INCLUDING, BUT NOT LIMITED TO, CUT AND FILL SLOPES, STREETS, PARKING AREAS, AND BUILDING PADS SHALL BE HYDROSEEDED.
13. BORROW AREAS AND TEMPORARY STOCKPILES SHALL BE PROTECTED WITH APPROPRIATE EROSION CONTROL MEASURES.
14. SANDBAGS AND STRAW WATTLES SHALL BE STOCKPILED ON SITE AND PLACED AT INTERVALS SHOWN ON EROSION CONTROL PLANS.
15. SANDBAGS REFERRED TO IN THE PRECEDING ITEMS MUST BE FULL. APPROVED GRAVEL BAG FILL MATERIALS ARE DECOMPOSED GRANITE AND/OR GRAVEL. WHERE USED IN ACTIVE ROADWAY AREAS, BAGS ARE TO BE TRAFFIC RATED.
16. PROVIDE VELOCITY CHECK DAMS IN ALL UNPAVED STREETS AND IN PAVED STREETS TO SERVE AS SILT ENCATCHMENTS AS SPECIFIED ON THESE PLANS AT THE INTERVALS INDICATED BELOW. VELOCITY CHECK DAMS MAY BE CONSTRUCTED OF STRAW BALES, SANDBAGS OR OTHER EROSION RESISTANT MATERIALS APPROVED BY THE INSPECTOR, AND SHALL EXTEND COMPLETELY ACROSS THE STREET OR CHANNEL AT RIGHT ANGLES TO THE CENTERLINE. EARTH DIKES MAY NOT BE USED AS VELOCITY CHECK DAMS.
17. PROVIDE VELOCITY CHECK DAMS IN ALL UNPAVED GRADED CHANNELS AT THE INTERVALS INDICATED BELOW:

GRADE OF CHANNEL	INTERVAL
LESS THAN 3%	100 FEET
3% TO 6%	50 FEET
OVER 6%	25 FEET

18. SEWER OR STORM DRAIN TRENCHES THAT ARE OUT THROUGH BASIN DIKES OR BASIN INLET DIKES, SHALL BE PLUGGED WITH SANDBAGS FROM TOP OF PIPE TO TOP OF DIKE. SEWER LINES SHALL FIRST BE ENCASED IN CONCRETE BEFORE SANDBAGS ARE PLACED.
19. ALL OPEN UTILITY TRENCHES SHALL BE BLOCKED AT THE PRESCRIBED INTERVALS FROM THE BOTTOM TO TOP WITH A DOUBLE ROW OF SANDBAGS PRIOR TO BACKFILL. SEWER TRENCHES SHALL BE BLOCKED AT THE PRESCRIBED INTERVALS WITH A DOUBLE ROW OF SANDBAGS EXTENDING DOWNWARD, TWO SANDBAGS FROM THE GRADED SURFACE OF THE STREET. SANDBAGS ARE TO BE PLACED WITH ALTERNATE HEADER AND STRETCHER COURSES. THE INTERVALS PRESCRIBED BETWEEN SANDBAG LOCKING SHALL DEPEND ON THE SLOPE OF THE GROUND SURFACE, BUT NOT EXCEED THE FOLLOWING:

GRADE OF THE STREET	INTERVAL
LESS THAN 2%	AS REQUIRED
2% TO 4%	100 FEET
4% TO 10%	50 FEET
OVER 10%	25 FEET

21. AFTER STORM DRAIN, SANITARY SEWER AND UTILITY TRENCHES ARE BACKFILLED AND COMPACTED, THE SURFACES OVER SUCH TRENCHES SHALL BE MOUNDED SLIGHTLY TO PREVENT CHANNELING OF WATER IN THE TRENCH AREA.
22. SEDIMENT TRAPS SHALL BE CLEANED OUT PRIOR TO PREDICTED RAINFALL. IT IS THE CONTRACTOR'S RESPONSIBILITY TO CLEAN THE THE SEDIMENT TRAPS.
23. THIS PLAN MAY NOT COVER ALL THE SITUATIONS THAT ARISE DURING CONSTRUCTION DUE TO UNANTICIPATED FIELD CONDITIONS. VARIATIONS MAY BE MADE TO THESE PLANS IN THE FIELD.
24. EROSION CONTROL STRUCTURES SHALL BE ADJUSTED BY THE CONTRACTOR TO REFLECT ALL CHANGES IN DRAINAGE AS STREETS AND BUILDING PADS ARE BEING INSTALLED.
25. THE CONTRACTOR SHALL STORE TEMPORARILY, STOCKPILES AND EROSION CONTROL SUPPLIES, TO HANDLE EMERGENCIES, AND SHALL BE PROTECTED WITH APPROPRIATE EROSION CONTROL MEASURES.
26. THE CONTRACTOR SHALL KEEP AN EMERGENCY PHONE # OF CREW CAPTAIN THAT WILL HANDLE EMERGENCIES.
27. THE CONTRACTOR–ASSIGNED STANDBY CREWS 24 HOURS SEVEN DAYS PER WEEK TO BE CALLED TO WORK DURING EACH RAINSTORM EMERGENCY.
28. THE CONTRACTOR SHALL ASSIGN ONE CREW CAPTAIN RESPONSIBLE FOR DAILY, WEEKLY, MONTHLY INSPECTION DURING WET, AND DRY WEATHER TO BE SURE ALL EROSION CONTROL MEASURES ARE WORKING PROPERLY AND RECORD THEIR INSPECTIONS ESPECIALLY AFTER EACH STORM IN A LOG.
29. DURING SITE WORK CONSTRUCTION, HAZARDOUS MATERIALS SHALL BE CONTAINED IN TRUCKS, WASTE PLACED IN DUMPSTER, AND CONCRETE AND TRUCK WASHING DONE OFFSITE IN APPROVED FACILITIES. VEHICLE AND EQUIPMENT STORAGE AREA LOCATION MAY CHANGE DURING CONSTRUCTION PHASES.
30. ALL CALLOUTS AND IMPLEMENTATION NOTES ARE TYPICAL, PLAN DOES NOT COVER EVERY SCENARIO. CONTRACTOR SHALL ADJUST TO FIELD CONDITIONS. SEE SWPPP APPENDIX H FOR DETAILS OF ALL EROSION CONTROL BMP'S TO BE USED
31. TEMPORARY EROSION CONTROL DEVICES SHOWN ON THIS EROSION CONTROL PLAN WHICH INTERFERE WITH THE WORK, SHALL BE RELOCATED OR MODIFIED WHEN THE INSPECTOR SO DIRECTS AS THE WORK PROGRESSES.
32. EXCEPT AS OTHERWISE DIRECTED BY THE INSPECTOR, ALL DEVICES SHOWN ON THE EROSION CONTROL PLAN SHALL BE IN PLACE AT THE END OF EACH WORKING DAY. ALL EROSION CONTROL FACILITIES MUST BE INSPECTED AND REPAIRED PRIOR THE END OF EACH WORKING DAY.
33. ALL EROSION AND SEDIMENT CONTROL MEASURES SHALL BE CONSTRUCTED AND MAINTAINED IN ACCORDANCE WITH THE PROVISIONS OF THE ASSOCIATION OF BAY AREA GOVERNMENTS (ABAG) "MANUAL OF STANDARDS FOR EROSION AND SEDIMENT CONTROL MEASURES." CONTROL MEASURES ARE SUBJECT TO THE INSPECTION AND APPROVAL OF THE ENGINEERING DIVISION OF THE COUNTY PUBLIC WORKS PLANNING DEPARTMENT.
34. ALL LOOSE SOIL AND DEBRIS SHALL BE REMOVED FROM THE STREET AREAS UPON STARTING OPERATIONS AND PERIODICALLY THEREAFTER AS DIRECTED BY THE INSPECTOR. THE SITE SHALL BE MAINTAINED SO AS TO MINIMIZE SEDIMENT–LADEN RUNOFF TO ANY STORM DRAIN SYSTEM.
35. ANY MUD THAT IS TRACKED ONTO PUBLIC STREETS SHALL BE REMOVED THE SAME DAY AS REQUIRED BY THE COUNTY.
36. TEMPORARY STOCKPILES SHALL BE PROTECTED WITH THE APPROPRIATE EROSION CONTROL MEASURES TO THE SATISFACTION OF THE TOWN ENGINEER.
37. ALL GRADED AREAS SHALL BE HYDROSEEDED. SUGGESTED MIX DESIGN FOLLOWS:

'BLANDO' BROME	40 LBS/ACRE
ZORRO FESCUE	10 LBS/ACRE
HYKON ROSE CLOVER	9 LBS/ACRE
SUB CLOVER	5 LBS/ACRE
CALIFORNIA NATIVE WILDFLOWER	8 LBS/ACRE
FERTILIZER	300 LBS/ACRE
ORGANIC BINDER	100 LBS/ACRE
STRAW MULCH	4000 LBS/ACRE

STORAGE AND WASTE MANAGEMENT NOTES:

1. CREATE A CONTAINED AND COVERED AREA ON THE SITE FOR STORAGE OF BAGS OF CEMENT, PAINTS, FLAMMABLES, OILS, FERTILIZERS, PESTICIDES, OR ANY OTHER MATERIALS USED ON THE PROJECT SITE THAT HAVE THE POTENTIAL FOR BEING DISCHARGED TO THE STORM DRAIN SYSTEM BY THE WIND OR IN THE EVENT OF A MATERIAL SPILL. NO HAZARDOUS WASTE MATERIAL SHALL BE STORED ON SITE.
2. GATHER ALL CONSTRUCTION DEBRIS ON A REGULAR BASIS AND PLACE THEM IN A DUMPSTER OR OTHER CONTAINER WHICH IS EMPTIED OR REMOVED ON A WEEKLY BASIS. WHEN APPROPRIATE, USE TARPS ON THE GROUND TO COLLECT FALLEN DEBRIS OR SPLATTERS THAT COULD CONTRIBUTE TO STORMWATER POLLUTION.

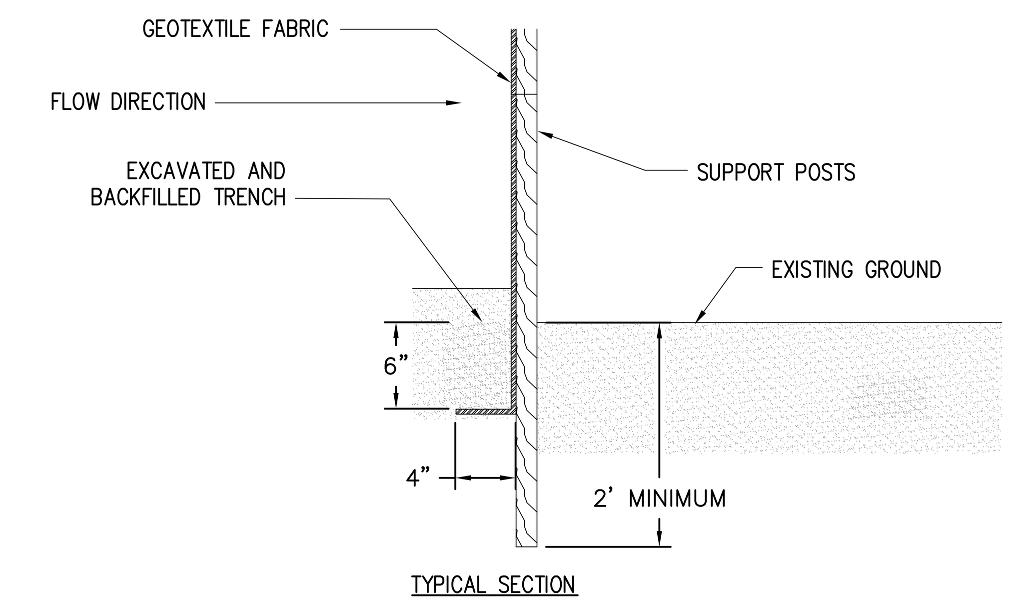

TYPICAL SECTION

NOTES:

1. THE GEOTEXTILE FABRIC SHALL BE PLACED IN THE EXCAVATED TRENCH, BACKFILLED, AND COMPACTED TO THE EXISTING GROUND SURFACE.
2. WOODEN SUPPORT POSTS SHALL BE A MINIMUM DIMENSION OF 1–1/8" x 1–1/8" AND 5 FEET LONG. BE A MAXIMUM OF 8 FEET FOR WOVEN FABRIC AND 3 FEET FOR NON–WOVEN FABRIC.
3. THE GEOTEXTILE FABRIC SHALL BE ATTACHED DIRECTLY TO THE UPSLOPE SIDE OF WOODEN POSTS WITH 0.5 INCH STAPLES IN AT LEAST 3 PLACES, OR WITH WOODEN LATH AND NAILS. ATTACHMENT TO STEEL POSTS WILL BE BY WIRE FASTENERS OR 50 POUND PLASTIC TIE STRAPS ON THE UPSLOPE SIDE.
4. THE GEOTEXTILE FABRIC SHALL CONSIST OF EITHER WOVEN OR NON–WOVEN POLYESTER, POLYPROPYLENE, STABILIZED NYLON, POLYETHYLENE, OR POLYVINYLIDENE CHLORIDE.

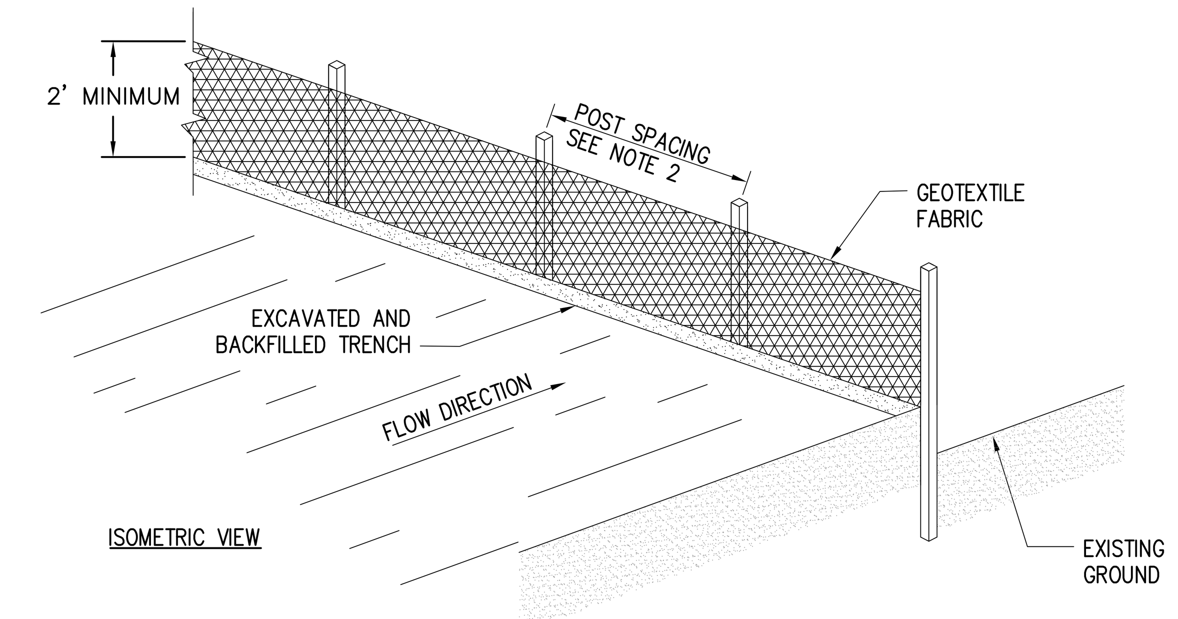

ISOMETRIC VIEW

CONSTRUCT BERMS ALONG DOWNSLOPE SIDES OF EACH PAD UNLESS DRAINING TO A DESIGNATED COLLECTION LOCATION PRIOR TO START OF RAINY SEASON (OCTOBER 1–APRIL 15). IF BERM IS NOT CONSTRUCTED PRIOR TO OCTOBER 15, A SILT FENCE SHALL BE PLACED.

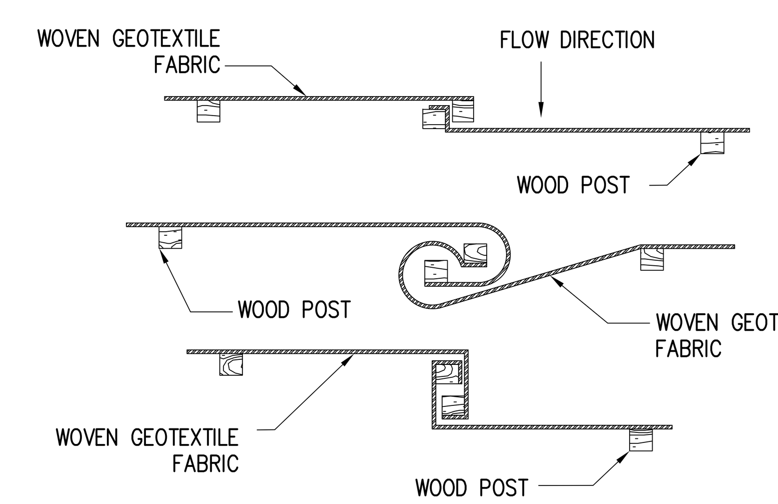

TWIST METHOD JOINING

F/- SILT FENCE DETAILS

NOT TO SCALE

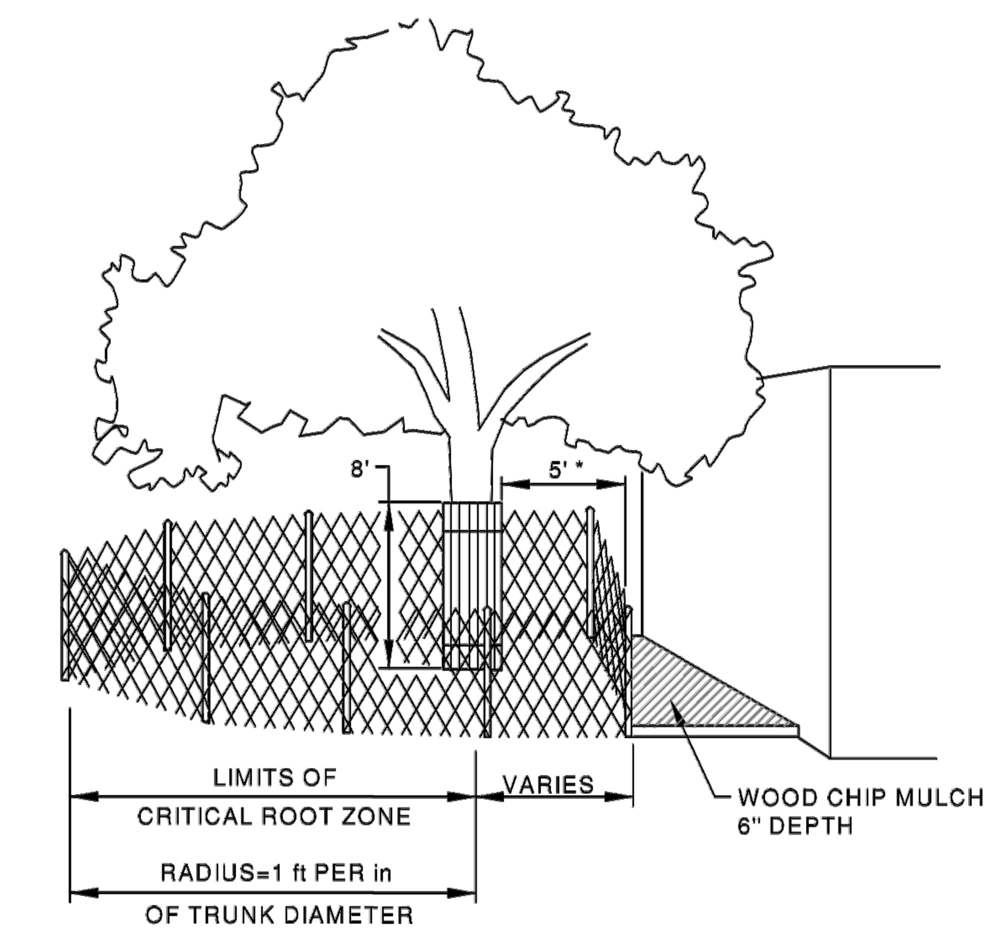

*AS NEEDED TO PROVIDE MINIMUM NECESSARY WORK SPACE. IF LESS THAN 5', THEN ADD BOARDS STRAPPED TO TRUNK.

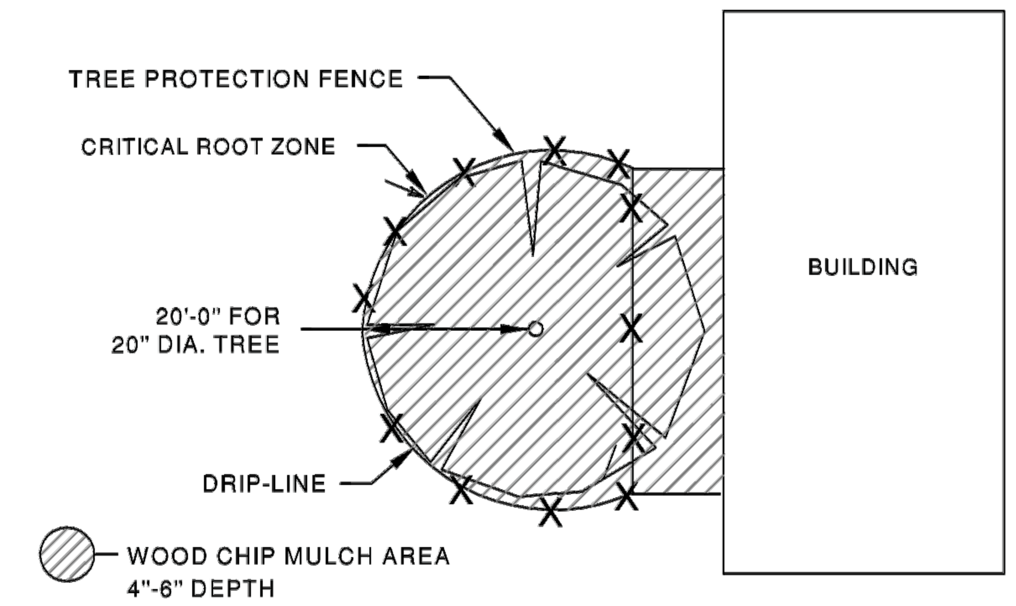

G/- TREE PROTECTION DETAIL

NOT TO SCALE

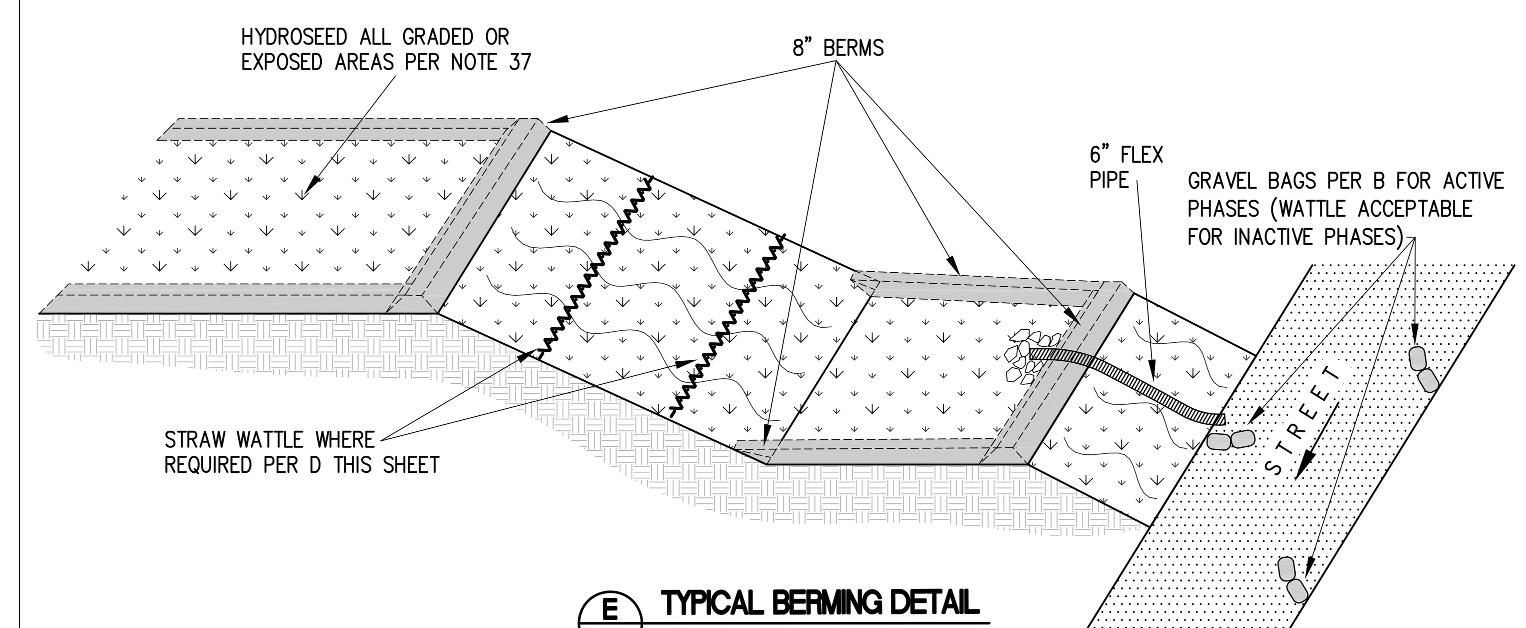

E/- TYPICAL BERMING DETAIL

NOT TO SCALE

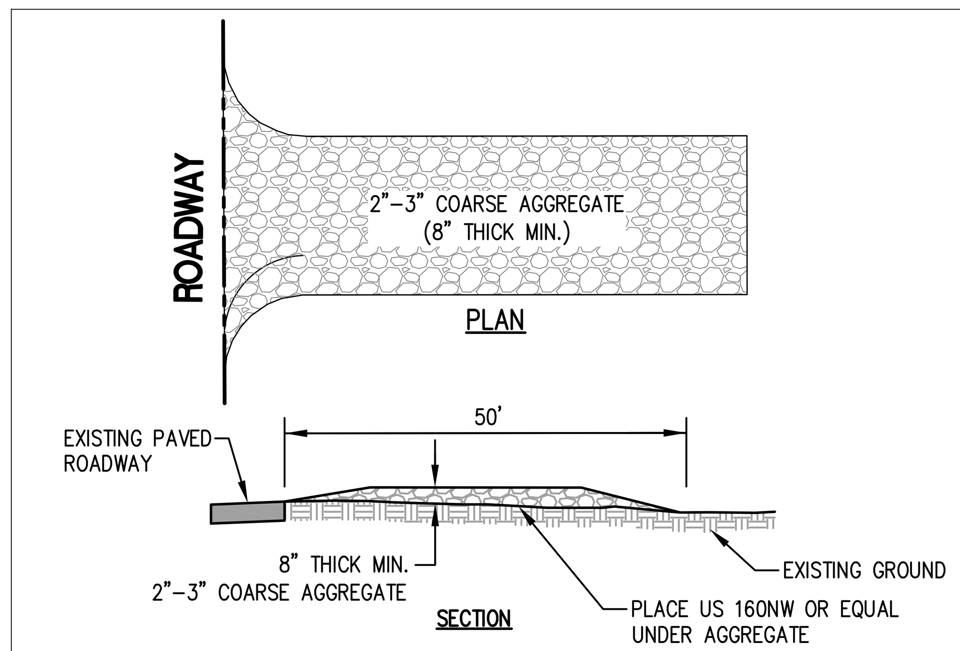

NOTE:
1. SEE EC–1 FOR STABILIZED ENTRANCE LOCATION.
2. THE ENTRANCE SHALL BE MAINAINED IN A CONDITION THAT WILL PREVENT TRACKING OR FLOWING OF SEDIMENT ONTO STREE.

A/- STABILIZED CONSTRUCTION ENTRANCE DETAIL

NOT TO SCALE

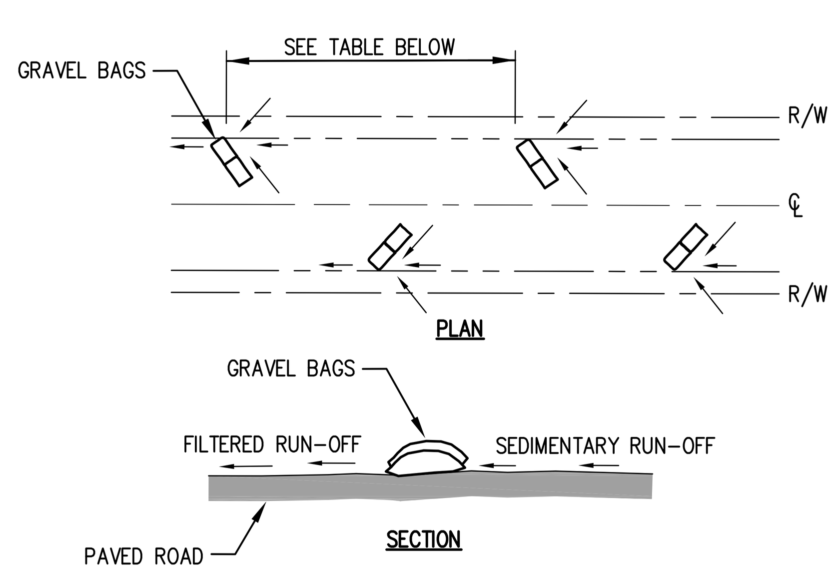

GRADE	INTERVAL
UP TO 1%	150 FEET
1% – 6%	100 FEET
6% – 15%	50 FEET
15% – 20%	25 FEET

NOTE:
IF REQUESTED BY COUNTY ENGINER, USE ONLY ON PAVED ROAD TO REPLACED STRAW WATTLE CHECK DAM.

B/- GRAVEL BAGS CHECK DAM DETAIL

NOT TO SCALE

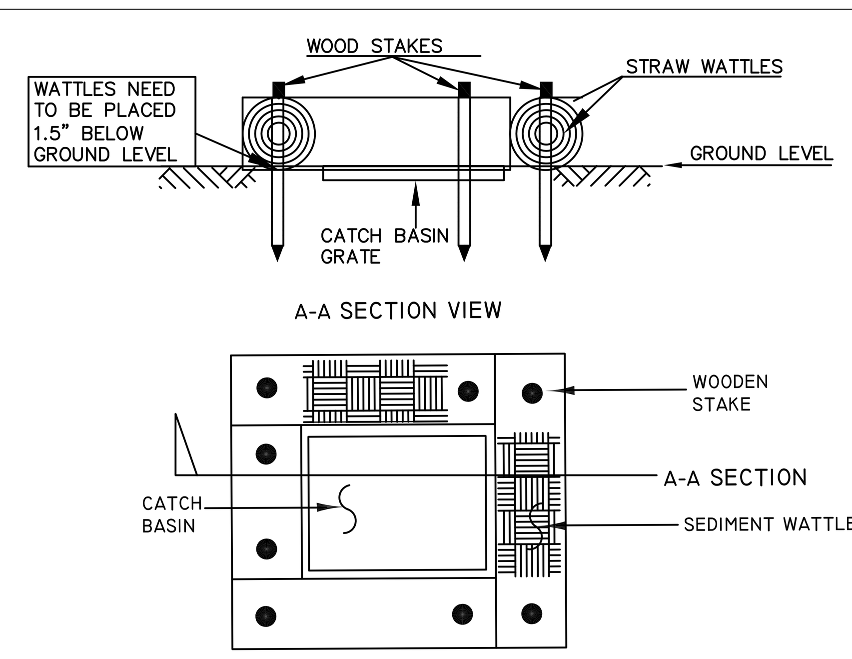

SEDIMENT WATTLE

NOT TO SCALE

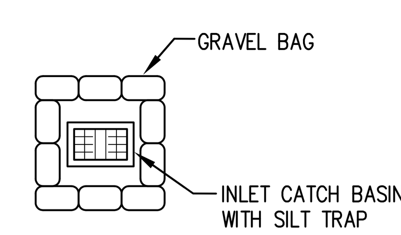

INLET PROTECTION DETAIL

NOT TO SCALE

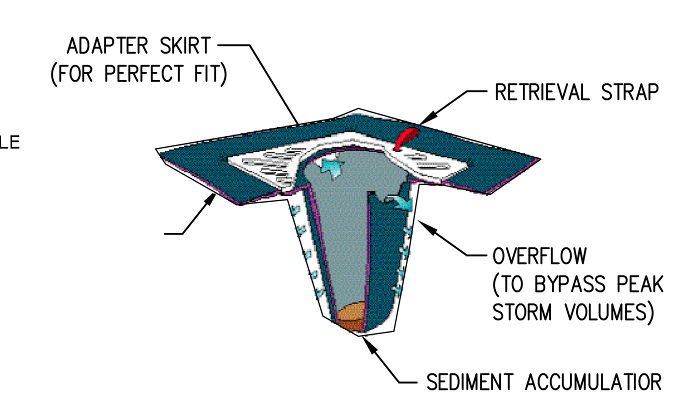

SILT TRAP DETAIL

NOT TO SCALE

C/- INLET PROTECTION DETAILS

NOT TO SCALE

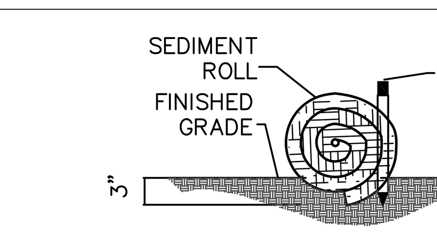

ENTRENCHMENT DETAIL IN FLAT AREA

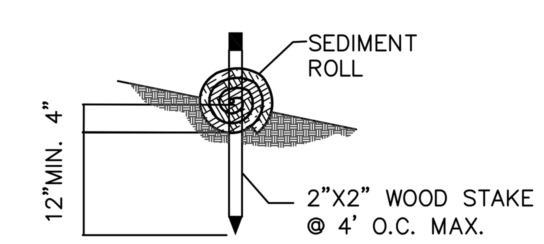

ENTRENCHMENT DETAIL IN SLOPED AREA

STRAW WATTLE SHALL BE PLACED ON ALL GRADED SLOPES SEE SWPPP APPENDIX H, SE–5 FOR IMPLEMENTATION

STRAW WATTLE INTERVALS PER THE FOLLOWING:
SLOPE>2:1 –> EVERY 10 FT ON SLOPE
SLOPE<2:1 > 4:1 EVERY 15 FT ON SLOPE
SLOPE<4:1 EVERY 20 FT ON SLOPE
& AT THE TOP OF ALL GRADED SLOPES

D/- STRAW WATTLE DETAILS

NOT TO SCALE

CALL BEFORE YOU DIG
UNDERGROUND SERVICE ALERT
800–227–2600

THE CONTRACTOR SHALL NOTIFY UNDERGROUND SERVICE ALERT AND THE CITY PUBLIC WORKS DEPARTMENT AT LEAST 48 HOURS (2 WORKING DAYS) PRIOR TO BEGINNING ANY EXCAVATION IN THE VICINITY OF THE UNDERGROUND FACILITIES.

Aliquot Associates, Inc.
1390 S. Main St. - Ste. 310
Walnut Creek, CA 94596
Telephone: (925) 476-2300
Fax: (925) 476-2350

Planners
Civil Engineers
Surveyors

ALIQUOT

REGISTERED PROFESSIONAL ENGINEER ROBERT C. WONG No. 43748 Exp. Mar. 31, 2015 CIVIL STATE OF CALIFORNIA

EROSION CONTROL DETAILS
BALL ESTATES
SWPPP AFTER SITE GRADING
SUBDIVISION 9338 – 333 CAMILLE AVENUE
ALAMO CONTRA COSTA COUNTY CALIFORNIA

No.	Revisions

Date 1/30/2017
Scale AS SHOWN
Design VJD/FW
Drawn MS
Approved RCW
Job No 201032

Drawing Number: 7

7 OF 7

APPENDIX A

Rational Method Hydrology and Hydraulic Calculations – Camille Ave System

Storm Sewer Inventory Report

Line No.	Alignment				Flow Data				Physical Data								Line ID
	Dnstr Line No.	Line Length (ft)	Defl angle (deg)	Junc Type	Known Q (cfs)	Drng Area (ac)	Runoff Coeff (C)	Inlet Time (min)	Invert El Dn (ft)	Line Slope (%)	Invert El Up (ft)	Line Size (in)	Line Shape	N Value (n)	J-Loss Coeff (K)	Inlet/ Rim El (ft)	
1	End	91.000	0.000	DrGrt	0.00	15.60	0.50	5.0	270.00	34.55	301.44	60	Cir	0.024	0.42	308.40	CB9
2	1	518.000	0.000	DrGrt	0.00	23.32	0.50	5.0	301.69	1.00	306.87	60	Cir	0.015	0.17	315.36	CB8
3	2	447.000	0.000	DrGrt	0.00	5.59	0.50	5.0	306.96	0.30	308.30	60	Cir	0.015	1.25	323.30	CB7
4	3	343.000	0.000	DrGrt	0.00	26.60	0.50	5.0	313.49	0.28	314.45	60	Cir	0.015	1.25	327.19	CB6
5	4	324.000	0.000	DrGrt	0.00	111.94	0.47	5.0	319.07	0.75	321.50	60	Cir	0.015	1.25	332.73	CB5
6	5	515.000	0.000	DrGrt	0.00	0.00	0.40	5.0	327.45	1.85	336.98	48	Cir	0.015	1.25	346.78	CB4
7	6	96.000	0.000	DrGrt	0.00	6.66	0.45	5.0	337.03	2.49	339.42	48	Cir	0.015	0.17	349.15	CB3
8	7	224.000	0.000	DrGrt	0.00	0.00	0.40	5.0	339.42	2.49	345.00	48	Cir	0.015	0.17	356.84	CB2
9	8	68.000	0.000	Hdwl	0.00	157.42	0.40	22.4	347.92	1.09	348.66	48	Cir	0.015	1.25	365.00	CB1

Project File: Camille Pre.stm PRE DEVELOPMENT FLOW Number of lines: 9 Date: 9/8/2017

Storm Sewer Summary Report

Line No.	Line ID	Flow rate (cfs)	Line Size (in)	Line shape	Line length (ft)	Invert EL Dn (ft)	Invert EL Up (ft)	Line Slope (%)	HGL Down (ft)	HGL Up (ft)	Minor loss (ft)	HGL Junct (ft)	Dns Line No.	Junction Type
1	CB9	228.2	60	Cir	91.000	270.00	301.44	34.549	287.10	305.71	n/a	305.71	End	DropGrate
2	CB8	219.5	60	Cir	518.000	301.69	306.87	1.000	306.30	311.07	n/a	311.07	1	DropGrate
3	CB7	204.7	60	Cir	447.000	306.96	308.30	0.300	311.80*	315.28*	2.11	317.39	2	DropGrate
4	CB6	202.6	60	Cir	343.000	313.49	314.45	0.280	318.02*	320.78*	2.07	322.85	3	DropGrate
5	CB5	183.9	60	Cir	324.000	319.07	321.50	0.750	323.14	325.38	n/a	325.38	4	DropGrate
6	CB4	103.8	48	Cir	515.000	327.45	336.98	1.850	329.71	340.06	1.94	340.06	5	DropGrate
7	CB3	104.2	48	Cir	96.000	337.03	339.42	2.490	340.55	342.51	n/a	342.51	6	DropGrate
8	CB2	100.3	48	Cir	224.000	339.42	345.00	2.491	343.07	348.03	0.25	348.03	7	DropGrate
9	CB1	100.5	48	Cir	68.000	347.92	348.66	1.088	350.56	351.70	1.88	351.70	8	OpenHeadwall

Project File: Camille Pre.stm PRE DEVELOPMENT FLOW

Number of lines: 9

Run Date: 9/8/2017

NOTES: Return period = 10 Yrs. ; *Surcharged (HGL above crown).

MyReport

Line No.	DnStm Ln No	Line ID	Total Runoff (cfs)	Invert Dn (ft)	HGL Dn (ft)	Sf Dn (%)	Invert Up (ft)	HGL Up (ft)	Sf Up (%)	HGL Jnct (ft)	Line Size (in)	Vel Dn (ft/s)	Vel Up (ft/s)	Energy Loss (ft)	Minor Loss (ft)	Gnd/Rim El Dn (ft)	Gnd/Rim El Up (ft)	Tc (min)	i Sys (in/hr)
1	Outfall	CB9	228.20	270.00	287.10	2.617	301.44	305.71	2.448	305.71	60	11.62	12.78	2.304	n/a	0.00	308.40	26.3	1.48
2	1	CB8	219.52	301.69	306.30	0.000	306.87	311.07	0.000	311.07	60	11.59	12.46	0.000	n/a	308.40	315.36	25.5	1.50
3	2	CB7	204.75	306.96	311.80	0.722	308.30	315.28	0.823	317.39	60	10.53	10.43	3.452	2.11	315.36	323.30	24.8	1.52
4	3	CB6	202.60	313.49	318.02	0.706	314.45	320.78	0.806	322.85	60	10.84	10.32	2.592	2.07	323.30	327.19	24.3	1.54
5	4	CB5	183.94	319.07	323.14	0.000	321.50	325.38	0.000	325.38	60	10.75	11.25	0.000	n/a	327.19	332.73	23.8	1.55
6	5	CB4	103.80	327.45	329.71	0.000	336.98	340.06	0.000	340.06	48	14.15	9.99	0.000	1.94	332.73	346.78	23.1	1.57
7	6	CB3	104.17	337.03	340.55	0.000	339.42	342.51	0.000	342.51	48	8.90	10.01	0.000	n/a	346.78	349.15	22.9	1.58
8	7	CB2	100.29	339.42	343.07	0.000	345.00	348.03	0.000	348.03	48	8.33	9.81	0.000	0.25	349.15	356.84	22.5	1.59
9	8	CB1	100.52	347.92	350.56	0.000	348.66	351.70	0.000	351.70	48	11.41	9.82	0.000	1.88	356.84	365.00	22.4	1.60

Project File: Camille Pre.stm PRE DEVELOPMENT FLOW | Number of lines: 9 | Date: 9/8/2017

NOTES: Intensity = 7.07 / (Inlet time + 0.20) ^ 0.48 -- Return period = 10 Yrs. ; ** Critical depth

Hydraulic Grade Line Computations

Line	Size	Q	Downstream								Len	Upstream								Check		JL coeff	Minor loss
	(in)	(cfs)	Invert elev (ft)	HGL elev (ft)	Depth (ft)	Area (sqft)	Vel (ft/s)	Vel head (ft)	EGL elev (ft)	Sf (%)	(ft)	Invert elev (ft)	HGL elev (ft)	Depth (ft)	Area (sqft)	Vel (ft/s)	Vel head (ft)	EGL elev (ft)	Sf (%)	Ave Sf (%)	Enrgy loss (ft)	(K)	(ft)
(1)	(2)	(3)	(4)	(5)	(6)	(7)	(8)	(9)	(10)	(11)	(12)	(13)	(14)	(15)	(16)	(17)	(18)	(19)	(20)	(21)	(22)	(23)	(24)
1	60	228.2	270.00	287.10	5.00	17.86	11.62	2.10	289.20	2.617	91.000	301.44	305.71	4.27**	17.86	12.78	2.54	308.25	2.448	2.532	n/a	0.42	n/a
2	60	219.5	301.69	306.30	4.61	17.61	11.59	2.42	308.72	0.000	518.000	306.87	311.07	4.20**	17.61	12.46	2.42	313.49	0.000	0.000	n/a	0.17	n/a
3	60	204.7	306.96	311.80	4.84	19.44	10.53	1.73	313.52	0.722	447.000	308.30	315.28	5.00	19.63	10.43	1.69	316.97	0.823	0.772	3.452	1.25	2.11
4	60	202.6	313.49	318.02	4.53	18.70	10.84	1.83	319.84	0.706	343.000	314.45	320.78	5.00	19.63	10.32	1.66	322.44	0.806	0.756	2.592	1.25	2.07
5	60	183.9	319.07	323.14	4.07	16.35	10.75	1.97	325.11	0.000	324.000	321.50	325.38	3.88**	16.35	11.25	1.97	327.35	0.000	0.000	n/a	1.25	n/a
6	48	103.8	327.45	329.71	2.26*	7.33	14.15	1.55	331.27	0.000	515.000	336.98	340.06	3.08**	10.39	9.99	1.55	341.61	0.000	0.000	n/a	1.25	1.94
7	48	104.2	337.03	340.55	3.52	10.41	8.90	1.56	342.10	0.000	96.000	339.42	342.51	3.09**	10.41	10.01	1.56	344.06	0.000	0.000	n/a	0.17	n/a
8	48	100.3	339.42	343.07	3.65	10.22	8.33	1.50	344.57	0.000	224.000	345.00	348.03	3.03**	10.22	9.81	1.50	349.53	0.000	0.000	n/a	0.17	0.25
9	48	100.5	347.92	350.56	2.64*	8.81	11.41	1.50	352.06	0.000	68.000	348.66	351.70	3.04**	10.23	9.82	1.50	353.20	0.000	0.000	n/a	1.25	1.88

Project File: Camille Pre.stm PRE DEVELOPMENT FLOW | Number of lines: 9 | Run Date: 9/8/2017

Notes: * (dc+D)/2 depth assumed; ** Critical depth. ; c = cir e = ellip b = box

Hydraflow HGL Computation Procedure

General Procedure:

Hydraflow computes the HGL using the Bernoulli energy equation. Manning's equation is used to determine energy losses due to pipe friction. In a standard step, iterative procedure, Hydraflow assumes upstream HGLs until the energy equation balances. If the energy equation cannot balance, supercritical flow exists and critical depth is temporarily assumed at the upstream end. A supercritical flow Profile is then computed using the same procedure in a downstream direction using momentum principles.

Col. 1 The line number being computed. Calculations begin at Line 1 and proceed upstream.

Col. 2 The line size. In the case of non-circular pipes, the line rise is printed above the span.

Col. 3 Total flow rate in the line.

Col. 4 The elevation of the downstream invert.

Col. 5 Elevation of the hydraulic grade line at the downstream end. This is computed as the upstream HGL + Minor loss of this line's downstream line.

Col. 6 The downstream depth of flow inside the pipe (HGL - Invert elevation) but not greater than the line size.

Col. 7 Cross-sectional area of the flow at the downstream end.

Col. 8 The velocity of the flow at the downstream end, (Col. 3 / Col. 7).

Col. 9 Velocity head (Velocity squared / 2g).

Col. 10 The elevation of the energy grade line at the downstream end, HGL + Velocity head, (Col. 5 + Col. 9).

Col. 11 The friction slope at the downstream end (the S or Slope term in Manning's equation).

Col. 12 The line length.

Col. 13 The elevation of the upstream invert.

Col. 14 Elevation of the hydraulic grade line at the upstream end.

Col. 15 The upstream depth of flow inside the pipe (HGL - Invert elevation) but not greater than the line size.

Col. 16 Cross-sectional area of the flow at the upstream end.

Col. 17 The velocity of the flow at the upstream end, (Col. 3 / Col. 16).

Col. 18 Velocity head (Velocity squared / 2g).

Col. 19 The elevation of the energy grade line at the upstream end, HGL + Velocity head, (Col. 14 + Col. 18) .

Col. 20 The friction slope at the upstream end (the S or Slope term in Manning's equation).

Col. 21 The average of the downstream and upstream friction slopes.

Col. 22 Energy loss. Average Sf/100 x Line Length (Col. 21/100 x Col. 12). Equals (EGL upstream - EGL downstream) +/- tolerance.

Col. 23 The junction loss coefficient (K).

Col. 24 Minor loss. (Col. 23 x Col. 18). Is added to upstream HGL and used as the starting HGL for the next upstream line(s).

PRE DEVELOPMENT FLOW

Storm Sewer Inventory Report

Line No.	Alignment				Flow Data				Physical Data								Line ID
	Dnstr Line No.	Line Length (ft)	Defl angle (deg)	Junc Type	Known Q (cfs)	Drng Area (ac)	Runoff Coeff (C)	Inlet Time (min)	Invert El Dn (ft)	Line Slope (%)	Invert El Up (ft)	Line Size (in)	Line Shape	N Value (n)	J-Loss Coeff (K)	Inlet/ Rim El (ft)	
1	End	91.000	-164.564	DrGrt	0.00	15.60	0.50	5.0	270.00	34.55	301.44	60	Cir	0.024	0.42	308.40	CB9
2	1	518.000	0.000	DrGrt	0.00	23.32	0.50	5.0	301.69	1.00	306.87	60	Cir	0.015	0.17	315.36	CB8
3	2	447.000	0.000	DrGrt	0.00	5.95	0.50	5.0	306.96	0.30	308.30	60	Cir	0.015	1.25	323.30	CB7
4	3	343.000	0.000	DrGrt	0.00	26.60	0.50	5.0	313.49	0.28	314.45	60	Cir	0.015	1.25	327.19	CB6
5	4	324.000	0.000	DrGrt	0.00	84.59	0.49	5.0	319.07	0.75	321.50	60	Cir	0.015	1.25	332.73	CB5
6	5	515.000	0.000	DrGrt	0.00	0.00	0.50	5.0	327.45	1.85	336.98	48	Cir	0.015	1.25	346.78	CB4
7	6	96.000	0.000	DrGrt	0.00	4.45	0.50	5.0	337.03	2.49	339.42	48	Cir	0.015	0.17	349.15	CB3
8	7	224.000	0.000	DrGrt	0.00	54.39	0.43	5.0	339.42	2.49	345.00	48	Cir	0.015	0.17	356.84	CB2
9	8	110.000	0.000	Hdwl	0.00	160.11	0.40	22.4	345.00	13.64	360.00	48	Cir	0.015	1.25	365.00	HW1

Project File: Camille Post.stm POST DEVELOPMENT FLOW

Number of lines: 9

Date: 9/12/2017

Storm Sewer Summary Report

Line No.	Line ID	Flow rate (cfs)	Line Size (in)	Line shape	Line length (ft)	Invert EL Dn (ft)	Invert EL Up (ft)	Line Slope (%)	HGL Down (ft)	HGL Up (ft)	Minor loss (ft)	HGL Junct (ft)	Dns Line No.	Junction Type
1	CB9	247.8	60	Cir	91.000	270.00	301.44	34.549	287.10	305.85	n/a	305.85	End	DropGrate
2	CB8	239.2	60	Cir	518.000	301.69	306.87	1.000	306.38	311.29	0.45	311.74	1	DropGrate
3	CB7	224.5	60	Cir	447.000	306.96	308.30	0.300	312.34*	316.77*	2.54	319.31	2	DropGrate
4	CB6	222.1	60	Cir	343.000	313.49	314.45	0.280	319.35*	322.67*	2.49	325.15	3	DropGrate
5	CB5	203.7	60	Cir	324.000	319.07	321.50	0.750	325.47*	328.11*	2.09	330.20	4	DropGrate
6	CB4	141.2	48	Cir	515.000	327.45	336.98	1.850	330.24	340.50	2.82	340.50	5	DropGrate
7	CB3	141.6	48	Cir	96.000	337.03	339.42	2.490	340.78	342.94	n/a	342.94	6	DropGrate
8	CB2	139.0	48	Cir	224.000	339.42	345.00	2.491	343.31	348.50	n/a	348.50	7	DropGrate
9	HW1	102.2	48	Cir	110.000	345.00	360.00	13.636	349.68	363.06	n/a	363.06	8	OpenHeadwall

Project File: Camille Post.stm

POST DEVELOPMENT FLOW

Number of lines: 9

Run Date: 9/12/2017

NOTES: Return period = 10 Yrs. ; *Surcharged (HGL above crown).

MyReport

Line No.	DnStm Ln No	Line ID	Total Runoff (cfs)	Invert Dn (ft)	HGL Dn (ft)	Sf Dn (%)	Invert Up (ft)	HGL Up (ft)	Sf Up (%)	HGL Jnct (ft)	Line Size (in)	Vel Dn (ft/s)	Vel Up (ft/s)	Energy Loss (ft)	Minor Loss (ft)	Gnd/Rim El Dn (ft)	Gnd/Rim El Up (ft)	Tc (min)	i Sys (in/hr)
1	Outfall	CB9	247.77	270.00	287.10	3.085	301.44	305.85	2.771	305.85	60	12.62	13.52	2.664	n/a	0.00	308.40	26.1	1.49
2	1	CB8	239.25	301.69	306.38	0.971	306.87	311.29	1.005	311.74	60	12.51	13.02	5.117	0.45	308.40	315.36	25.4	1.50
3	2	CB7	224.45	306.96	312.34	0.989	308.30	316.77	0.989	319.31	60	11.43	11.43	4.420	2.54	315.36	323.30	24.7	1.52
4	3	CB6	222.08	313.49	319.35	0.968	314.45	322.67	0.968	325.15	60	11.31	11.31	3.321	2.49	323.30	327.19	24.2	1.54
5	4	CB5	203.71	319.07	325.47	0.815	321.50	328.11	0.814	330.20	60	10.38	10.37	2.639	2.09	327.19	332.73	23.7	1.55
6	5	CB4	141.16	327.45	330.24	0.000	336.98	340.50	0.000	340.50	48	15.08	12.05	0.000	2.82	332.73	346.78	23.1	1.57
7	6	CB3	141.55	337.03	340.78	0.000	339.42	342.94	0.000	342.94	48	11.56	12.08	0.000	n/a	346.78	349.15	22.9	1.58
8	7	CB2	138.97	339.42	343.31	0.000	345.00	348.50	0.000	348.50	48	11.15	11.92	0.000	n/a	349.15	356.84	22.6	1.59
9	8	HW1	102.23	345.00	349.68	0.675	360.00	363.06	0.775	363.06	48	8.14	9.91	0.797	n/a	356.84	365.00	22.4	1.60

Project File: Camille Post.stm POST DEVELOPMENT FLOW | Number of lines: 9 | Date: 9/12/2017

NOTES: Intensity = 7.07 / (Inlet time + 0.20) ^ 0.48 -- Return period = 10 Yrs. ; ** Critical depth

Hydraulic Grade Line Computations

Line	Size	Q	Downstream								Len	Upstream								Check		JL coeff	Minor loss
	(in)	(cfs)	Invert elev (ft)	HGL elev (ft)	Depth (ft)	Area (sqft)	Vel (ft/s)	Vel head (ft)	EGL elev (ft)	Sf (%)	(ft)	Invert elev (ft)	HGL elev (ft)	Depth (ft)	Area (sqft)	Vel (ft/s)	Vel head (ft)	EGL elev (ft)	Sf (%)	Ave Sf (%)	Enrgy loss (ft)	(K)	(ft)
(1)	(2)	(3)	(4)	(5)	(6)	(7)	(8)	(9)	(10)	(11)	(12)	(13)	(14)	(15)	(16)	(17)	(18)	(19)	(20)	(21)	(22)	(23)	(24)
1	60	247.8	270.00	287.10	5.00	18.32	12.62	2.48	289.58	3.085	91.000	301.44	305.85	4.41**	18.32	13.52	2.84	308.69	2.771	2.928	n/a	0.42	n/a
2	60	239.2	301.69	306.38	4.69	19.13	12.51	2.43	308.81	0.971	518.000	306.87	311.29	4.42	18.37	13.02	2.64	313.93	1.005	0.988	5.117	0.17	0.45
3	60	224.5	306.96	312.34	5.00	19.63	11.43	2.03	314.38	0.989	447.000	308.30	316.77	5.00	19.63	11.43	2.03	318.80	0.989	0.989	4.420	1.25	2.54
4	60	222.1	313.49	319.35	5.00	19.63	11.31	1.99	321.34	0.968	343.000	314.45	322.67	5.00	19.63	11.31	1.99	324.66	0.968	0.968	3.321	1.25	2.49
5	60	203.7	319.07	325.47	5.00	19.63	10.38	1.67	327.14	0.815	324.000	321.50	328.11	5.00	19.63	10.37	1.67	329.78	0.814	0.815	2.639	1.25	2.09
6	48	141.2	327.45	330.24	2.79*	9.36	15.08	2.26	332.50	0.000	515.000	336.98	340.50	3.52**	11.71	12.05	2.26	342.76	0.000	0.000	n/a	1.25	2.82
7	48	141.6	337.03	340.78	3.75	11.72	11.56	2.27	343.05	0.000	96.000	339.42	342.94	3.52**	11.72	12.08	2.27	345.21	0.000	0.000	n/a	0.17	n/a
8	48	139.0	339.42	343.31	3.89	11.66	11.15	2.21	345.52	0.000	224.000	345.00	348.50	3.50**	11.66	11.92	2.21	350.71	0.000	0.000	n/a	0.17	n/a
9	48	102.2	345.00	349.68	4.00	10.32	8.14	1.03	350.71	0.675	110.000	360.00	363.06	3.06**	10.32	9.91	1.53	364.59	0.775	0.725	n/a	1.25	n/a

Project File: Camille Post.stm POST DEVELOPMENT FLOW | Number of lines: 9 | Run Date: 9/12/2017

Notes: * (dc+D)/2 depth assumed; ** Critical depth. ; c = cir e = ellip b = box

Hydraflow HGL Computation Procedure

General Procedure:

Hydraflow computes the HGL using the Bernoulli energy equation. Manning's equation is used to determine energy losses due to pipe friction. In a standard step, iterative procedure, Hydraflow assumes upstream HGLs until the energy equation balances. If the energy equation cannot balance, supercritical flow exists and critical depth is temporarily assumed at the upstream end. A supercritical flow Profile is then computed using the same procedure in a downstream direction using momentum principles.

Col. 1 The line number being computed. Calculations begin at Line 1 and proceed upstream.

Col. 2 The line size. In the case of non-circular pipes, the line rise is printed above the span.

Col. 3 Total flow rate in the line.

Col. 4 The elevation of the downstream invert.

Col. 5 Elevation of the hydraulic grade line at the downstream end. This is computed as the upstream HGL + Minor loss of this line's downstream line.

Col. 6 The downstream depth of flow inside the pipe (HGL - Invert elevation) but not greater than the line size.

Col. 7 Cross-sectional area of the flow at the downstream end.

Col. 8 The velocity of the flow at the downstream end, (Col. 3 / Col. 7).

Col. 9 Velocity head (Velocity squared / 2g).

Col. 10 The elevation of the energy grade line at the downstream end, HGL + Velocity head, (Col. 5 + Col. 9).

Col. 11 The friction slope at the downstream end (the S or Slope term in Manning's equation).

Col. 12 The line length.

Col. 13 The elevation of the upstream invert.

Col. 14 Elevation of the hydraulic grade line at the upstream end.

Col. 15 The upstream depth of flow inside the pipe (HGL - Invert elevation) but not greater than the line size.

Col. 16 Cross-sectional area of the flow at the upstream end.

Col. 17 The velocity of the flow at the upstream end, (Col. 3 / Col. 16).

Col. 18 Velocity head (Velocity squared / 2g).

Col. 19 The elevation of the energy grade line at the upstream end, HGL + Velocity head, (Col. 14 + Col. 18) .

Col. 20 The friction slope at the upstream end (the S or Slope term in Manning's equation).

Col. 21 The average of the downstream and upstream friction slopes.

Col. 22 Energy loss. Average Sf/100 x Line Length (Col. 21/100 x Col. 12). Equals (EGL upstream - EGL downstream) +/- tolerance.

Col. 23 The junction loss coefficient (K).

Col. 24 Minor loss. (Col. 23 x Col. 18). Is added to upstream HGL and used as the starting HGL for the next upstream line(s).

POST DEVELOPMENT FLOW

CCCFCD STANDARD - RUNOFF COEFFICIENTS

Rational Formula

Land Use	Runoff Coefficient	Average Impervious Area (%)	Time of Concentration-Roof to Gutter (min)
Residential:			
R - 6	.50 - .70	76	3 - 5
R - 10	.45 - .60	53	5 - 7
R - 20	.40 - .50	35	6 - 8
R - 40	.35 - .45	25	8 - 10
Apartment	.60 - .80		3 - 10
Commercial	.70 - .95		3 - 8
Industrial	.60 - .90		3 - 10
Open	.20 - .40		
Street:			
Asphalt	.75 - .95		
Concrete	.80 - .95		
Drives and Walks	.80 - .95		
Roofs	.75 - .95		

Legend

R - 6 = 6,000 ft^2 Lot
R - 10 = 10,000 ft^2 Lot
R - 20 = 20,000 ft^2 Lot
R - 40 = 40,000 ft^2 Lot

Note: For Contra Costa County Land Uses use the highest runoff coefficient in the range. This more closely approximates the peak flows calculated by the Unit Hydrograph method developed for Contra Costa County and calibrated with local rainfall and runoff data.

Time of Concentration

L = 1,320 ΔElev = 540

$S = \frac{540}{1320} = .41$ V = 7.5 ft/s (USDA Fig 15-4)

$t_c = \frac{1320}{7.5 \times 60} = \underline{2.93 \text{ min}}$

L = 1274 ΔElev = 320

$S = \frac{320}{1274} = .25$ V = 6.5 ft/s

$t_c = \frac{1274}{6.5 \times 60} = \underline{3.27 \text{ min}}$

L = 490 ΔElev = 50

$S = \frac{50}{490} = .10$ V = 4 ft/s

$t_c = \frac{490}{4 \times 60} = \underline{2.04 \text{ min}}$

L = 536 ΔElev = 70

$S = \frac{70}{536} = .13$ V = 4.7 ft/s

$t_c = \frac{536}{4.7 \times 60} = \underline{1.90 \text{ min}}$

L = 1698 ΔElev = 100 ft

$S = \frac{100}{1698} = .059$ V = 3.25 ft/s

$t_c = \frac{1698}{3.25 \times 60} = \underline{8.7 \text{ min}}$

Creek on-site:

L = 744 ΔElev = 33

$S = \frac{33}{744} = .044$ V = 3.5 ft/s

$t_c = \frac{744}{3.5 \times 60} = \underline{3.54 \text{ min}}$

$T_c = 2.93 + 3.27 + 2.04 + 1.9 + 8.7 + 3.54 = \boxed{22.4 \text{ min}}$

ALIQUOT
PLANNERS
CIVIL ENGINEERS
SURVEYORS
1390 SOUTH MAIN STREET
SUITE 310
WALNUT CREEK, CA. 94596
(925) 476-2300
FAX (925) 476-2350

Subject: Time of concentration
Job No. 201032.4 Ball subd. 9338
By: MC Date: 2/11/16 Chkd.
SHEET ____ OF ____

Figure 15–4 Velocity versus slope for shallow concentrated flow

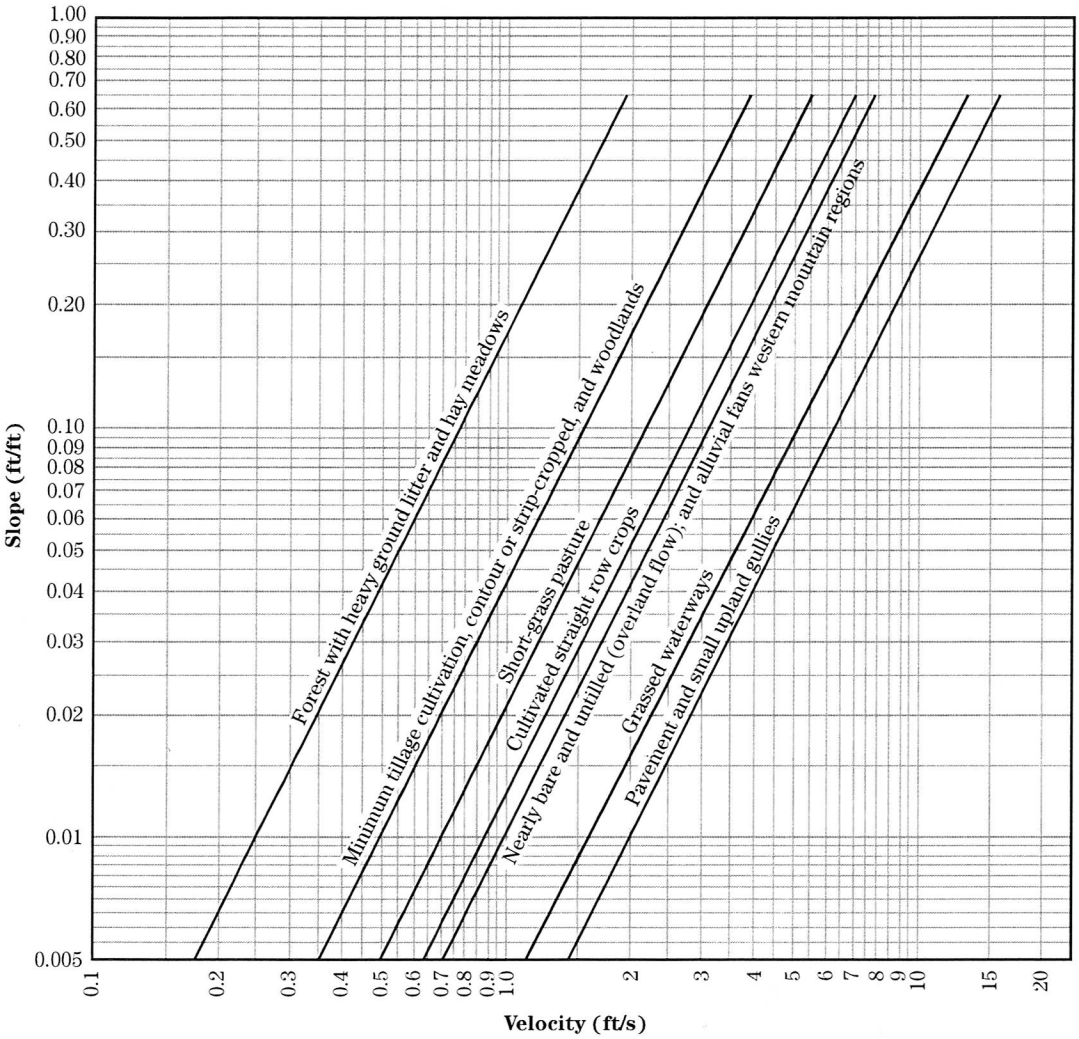

Table 15–3 Equations and assumptions developed from figure 15–4

Flow type	Depth (ft)	Manning's *n*	Velocity equation (ft/s)
Pavement and small upland gullies	0.2	0.025	$V = 20.328(s)^{0.5}$
Grassed waterways	0.4	0.050	$V = 16.135(s)^{0.5}$
Nearly bare and untilled (overland flow); and alluvial fans in western mountain regions	0.2	0.051	$V = 9.965(s)^{0.5}$
Cultivated straight row crops	0.2	0.058	$V = 8.762(s)^{0.5}$
Short-grass pasture	0.2	0.073	$V = 6.962(s)^{0.5}$
Minimum tillage cultivation, contour or strip-cropped, and woodlands	0.2	0.101	$V = 5.032(s)^{0.5}$
Forest with heavy ground litter and hay meadows	0.2	0.202	$V = 2.516(s)^{0.5}$

CONTRA COSTA COUNTY
TABLE OF HEADLOSS FACTORS
THROUGH STRUCTURES

TYPE OF STRUCTURE	K
1. Straight run with change in pipe size	0.25
2. Straight run with same pipe size	0.17
3. 0° - 45° deflection with change in pipe size	0.50
4. 0° - 45° deflection with same pipe size	0.42
5. 45° - 90° deflection with change in pipe size	0.75
6. 45° - 90° deflection with same pipe size	0.75
7. Approaching 90° deflection	1.00
8. 90° deflection	1.25
9. Drop manhole	1.25
10. Short radius curves (50' and shorter)	0.35

Notes:

County freeboard requirement is 1.25' (15") to grate (not TOC).

CCC uses Manning's "n" values of 0.015 for RCP, and 0.024 for CMP.

Contributing Watershed (Square Miles)	Design Event
0 to 1	10-year
1 to 4	25-year
Greater than 4 square miles	100-year

APPENDIX B

San Ramon Creek Hydrograph Analysis

Title: Ball Property Drainage Analysis
Date: 11/6/2013

Storm: 100-year 6-hour
Inflow Source: Contra Costa Small Watershed Hydrograph Method (HYDRO6)
Watershed Area: Existing Total Shed A=157.5ac ProposedTotal Shed A=159.41ac
Model: HEC-RAS 4.1.0
Assumptions: 1. Existing shed inflows to Camille Ave existing pipes system not included.
2. Detention basin (2.2 ac-ft) sized to mitigate peak runoff to existing

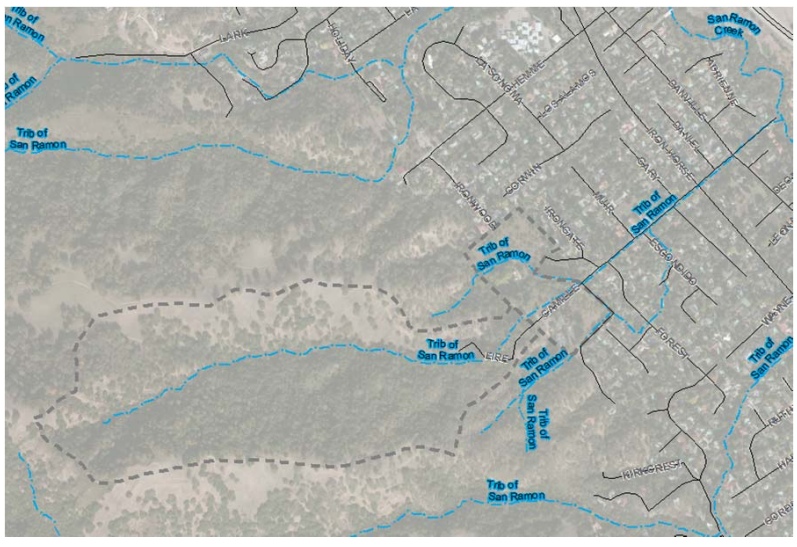

Location Map

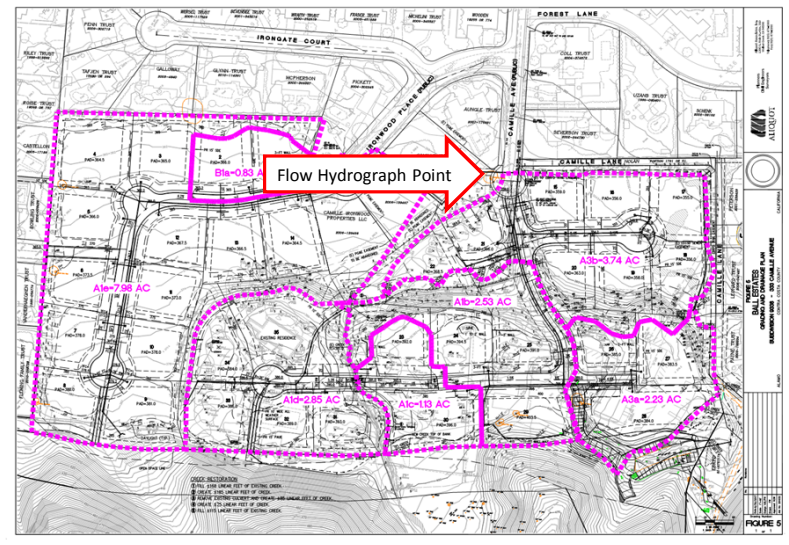

Property Development

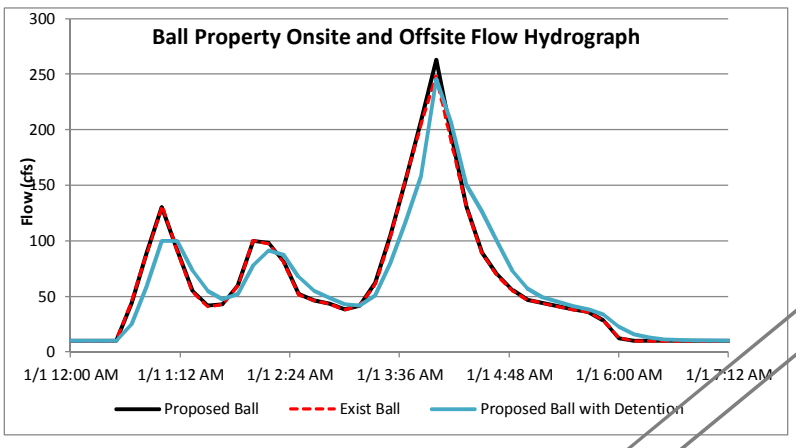

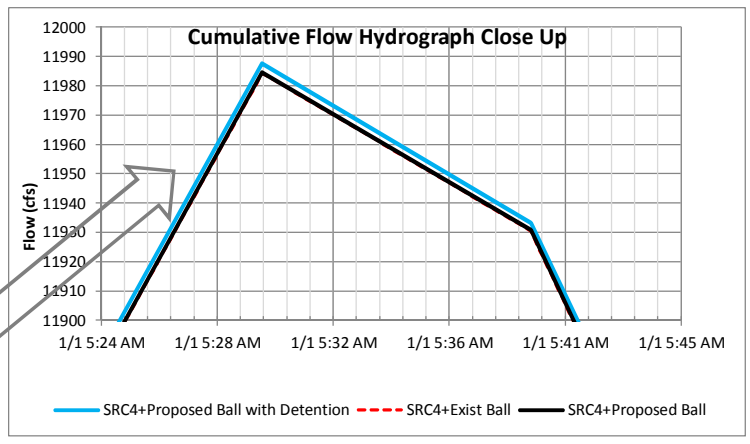

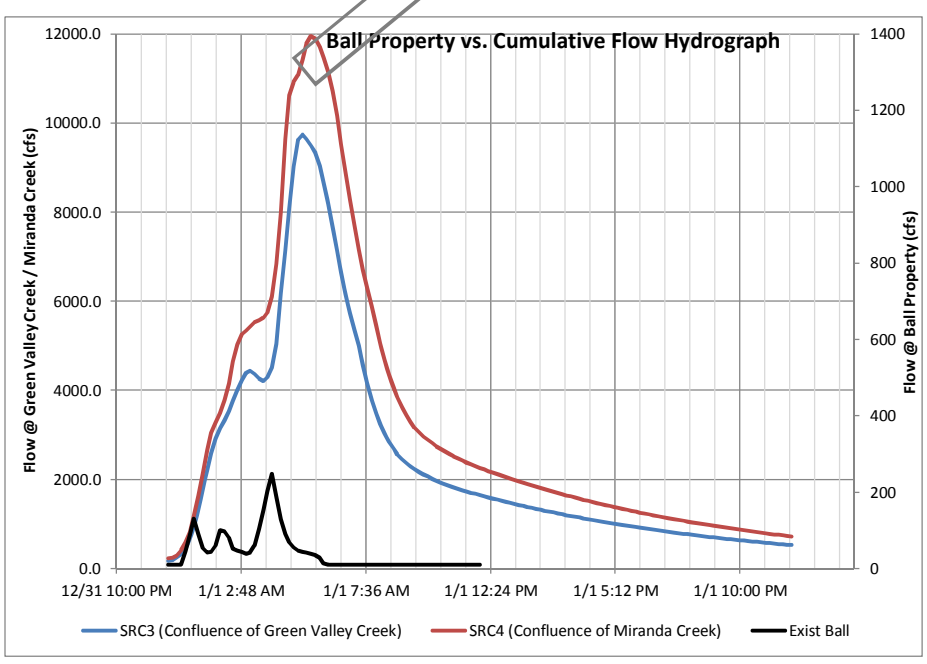

	Ball Property Onsite and Offsite Flow Hydrograph from HEC-RAS			Ball Property Downstream Flow Hydrograph		Cumulative Flow Hydrograph (Ball Property Onsite, Offsite and Downstream Flows)		
	Exist Ball	Proposed Ball	Proposed Ball with Detention	SRC3 (Confluence of Green Valley Creek)	SRC4 (Confluence of Miranda Creek)	SRC4+Exist Ball	SRC4+Proposed Ball	SRC4+Proposed Ball with Detention
Max Flow (cfs)	248	263	246	9,737	11,946	11,984	11,985	11,988
Time	Flow (cfs)	Flow (cfs)	Flow (cfs)	Flow (cfs)	Flow (cfs)	Flow (cfs)	Flow (cfs)	Flow (cfs)
01Jan2000 0000	10	10.05	10.05	170.5	226	236	236	236
01Jan2000 0010	10	10.05	10.05	182.1	239	249	249	249
01Jan2000 0020	10	10.05	10.05	239.3	285	295	295	295
01Jan2000 0030	10	10.05	10.05	315.3	403	413	413	413
01Jan2000 0040	44.39	44.23	24.82	447.5	575	620	619	600
01Jan2000 0050	88.12	88.56	58.68	675.3	814	902	902	872
01Jan2000 0100	131.32	130.23	100.15	952.0	1174	1306	1305	1275
01Jan2000 0110	90.64	91.64	99.84	1311.1	1619	1710	1711	1719
01Jan2000 0120	54.13	54.79	73.19	1781.8	2122	2177	2177	2196
01Jan2000 0130	41.14	41.72	54.99	2207.7	2663	2704	2704	2718
01Jan2000 0140	42.76	43.03	47.47	2585.3	3043	3086	3086	3090
01Jan2000 0150	59.97	60.04	52.13	2916.0	3279	3339	3339	3331
01Jan2000 0200	100.04	100.19	78.08	3152.0	3484	3584	3584	3562
01Jan2000 0210	97.48	97.96	91.42	3313.7	3773	3870	3871	3864
01Jan2000 0220	80.43	81.08	87.38	3534.4	4150	4230	4231	4237
01Jan2000 0230	51.14	51.94	67.84	3757.3	4638	4689	4690	4706
01Jan2000 0240	46.14	46.52	55.02	4006.9	5020	5066	5067	5075
01Jan2000 0250	43.2	43.61	48.49	4222.7	5254	5297	5297	5302
01Jan2000 0300	38.01	38.47	42.98	4390.1	5338	5376	5377	5381
01Jan2000 0310	41.83	42.01	41.99	4437.2	5425	5467	5467	5467
01Jan2000 0320	60.94	61.2	50.28	4366.4	5523	5584	5584	5573
01Jan2000 0330	104.53	104.81	79.87	4263.1	5579	5683	5683	5659
01Jan2000 0340	154.36	154.45	117.14	4202.9	5624	5778	5778	5741
01Jan2000 0350	203.49	207.65	158.17	4294.2	5741	5944	5948	5899
01Jan2000 0400	248.37	262.99	245.84	4512.9	6103	6351	6366	6348
01Jan2000 0410	188.41	196.5	206.71	5044.9	6835	7023	7031	7041
01Jan2000 0420	129.48	130.93	149.97	6174.3	7985	8115	8116	8135
01Jan2000 0430	89.56	90.39	126.39	7137.1	9641	9730	9731	9767
01Jan2000 0440	69.25	69.8	99.08	8069.5	10617	10686	10686	10716
01Jan2000 0450	55.11	55.63	72.86	9025.3	10914	10970	10970	10987
01Jan2000 0500	46.37	46.83	57.58	9619.4	11080	11126	11126	11137
01Jan2000 0510	43.54	43.9	49.49	9737.1	11415	11459	11459	11465

01Jan2000 0520	41.07	41.44	44.97	9632.0	11778	11819	11819	11823
01Jan2000 0530	37.75	38.16	41.2	9501.5	11946	11984	11985	11988
01Jan2000 0540	35.64	35.99	38.36	9324.1	11895	11930	11931	11933
01Jan2000 0550	28.3	28.71	33.85	9038.5	11708	11737	11737	11742
01Jan2000 0600	12.61	12.36	23	8651.6	11459	11472	11472	11482
01Jan2000 0610	10.05	10.09	15.96	8190.7	11142	11152	11152	11158
01Jan2000 0620	10	10.05	12.96	7660.1	10715	10725	10725	10728
01Jan2000 0630	10	10.05	11.46	7140.5	10152	10162	10162	10163
01Jan2000 0640	10	10.05	10.78	6641.1	9530	9540	9540	9540
01Jan2000 0650	10	10.05	10.43	6159.0	8894	8904	8904	8905
01Jan2000 0700	10	10.05	10.25	5724.8	8276	8286	8286	8286
01Jan2000 0710	10	10.05	10.16	5359.8	7694	7704	7704	7704
01Jan2000 0720	10	10.05	10.11	4995.0	7146	7156	7156	7156
01Jan2000 0730	10	10.05	10.08	4569.3	6703	6713	6713	6713
01Jan2000 0740	10	10.05	10.07	4154.4	6297	6307	6307	6307
01Jan2000 0750	10	10.05	10.06	3793.8	5883	5893	5893	5893
01Jan2000 0800	10	10.05	10.05	3494.4	5459	5469	5469	5469
01Jan2000 0810	10	10.05	10.05	3245.4	5051	5061	5061	5061
01Jan2000 0820	10	10.05	10.05	3034.2	4680	4690	4690	4690
01Jan2000 0830	10	10.05	10.05	2850.4	4355	4365	4365	4365
01Jan2000 0840	10	10.05	10.05	2693.5	4076	4086	4086	4086
01Jan2000 0850	10	10.05	10.05	2561.8	3835	3845	3845	3845
01Jan2000 0900	10	10.05	10.05	2453.4	3627	3637	3637	3637
01Jan2000 0910	10	10.05	10.05	2364.2	3448	3458	3458	3458
01Jan2000 0920	10	10.05	10.05	2289.5	3295	3305	3305	3305
01Jan2000 0930	10	10.05	10.05	2224.8	3167	3177	3177	3177
01Jan2000 0940	10	10.05	10.05	2167.1	3058	3068	3068	3068
01Jan2000 0950	10	10.05	10.05	2113.9	2965	2975	2975	2975
01Jan2000 1000	10	10.05	10.05	2064.1	2884	2894	2894	2894
01Jan2000 1010	10	10.05	10.05	2016.7	2812	2822	2822	2822
01Jan2000 1020	10	10.05	10.05	1971.4	2746	2756	2756	2756
01Jan2000 1030	10	10.05	10.05	1928.1	2684	2694	2694	2694
01Jan2000 1040	10	10.05	10.05	1887.6	2626	2636	2636	2636
01Jan2000 1050	10	10.05	10.05	1850.6	2570	2580	2580	2580
01Jan2000 1100	10	10.05	10.05	1816.9	2517	2527	2527	2527
01Jan2000 1110	10	10.05	10.05	1785.7	2467	2477	2477	2477
01Jan2000 1120	10	10.05	10.05	1756.2	2420	2430	2430	2430
01Jan2000 1130	10	10.05	10.05	1727.8	2376	2386	2386	2386
01Jan2000 1140	10	10.05	10.05	1700.2	2335	2345	2345	2345
01Jan2000 1150	10	10.05	10.05	1673.3	2296	2306	2306	2306
01Jan2000 1200	10	10.05	10.05	1646.8	2259	2269	2269	2269
01Jan2000 1210				1620.8	2222	2222	2222	2222
01Jan2000 1220				1595.3	2187	2187	2187	2187
01Jan2000 1230				1570.1	2152	2152	2152	2152
01Jan2000 1240				1545.4	2118	2118	2118	2118
01Jan2000 1250				1521.0	2085	2085	2085	2085
01Jan2000 1300				1497.0	2052	2052	2052	2052
01Jan2000 1310				1473.4	2020	2020	2020	2020
01Jan2000 1320				1450.2	1988	1988	1988	1988
01Jan2000 1330				1427.3	1956	1956	1956	1956
01Jan2000 1340				1404.8	1925	1925	1925	1925
01Jan2000 1350				1382.6	1895	1895	1895	1895
01Jan2000 1400				1360.8	1865	1865	1865	1865
01Jan2000 1410				1339.4	1836	1836	1836	1836
01Jan2000 1420				1318.2	1807	1807	1807	1807
01Jan2000 1430				1297.5	1778	1778	1778	1778
01Jan2000 1440				1277.0	1750	1750	1750	1750
01Jan2000 1450				1256.9	1723	1723	1723	1723
01Jan2000 1500				1237.1	1695	1695	1695	1695
01Jan2000 1510				1217.6	1669	1669	1669	1669
01Jan2000 1520				1198.4	1642	1642	1642	1642
01Jan2000 1530				1179.5	1617	1617	1617	1617
01Jan2000 1540				1160.9	1591	1591	1591	1591
01Jan2000 1550				1142.6	1566	1566	1566	1566
01Jan2000 1600				1124.6	1541	1541	1541	1541
01Jan2000 1610				1106.9	1517	1517	1517	1517
01Jan2000 1620				1089.4	1493	1493	1493	1493
01Jan2000 1630				1072.2	1470	1470	1470	1470
01Jan2000 1640				1055.3	1446	1446	1446	1446
01Jan2000 1650				1038.7	1424	1424	1424	1424
01Jan2000 1700				1022.3	1401	1401	1401	1401
01Jan2000 1710				1006.2	1379	1379	1379	1379
01Jan2000 1720				990.4	1357	1357	1357	1357
01Jan2000 1730				974.7	1336	1336	1336	1336
01Jan2000 1740				959.4	1315	1315	1315	1315
01Jan2000 1750				944.3	1294	1294	1294	1294
01Jan2000 1800				929.4	1274	1274	1274	1274
01Jan2000 1810				914.7	1254	1254	1254	1254
01Jan2000 1820				900.3	1234	1234	1234	1234
01Jan2000 1830				886.1	1214	1214	1214	1214
01Jan2000 1840				872.2	1195	1195	1195	1195
01Jan2000 1850				858.4	1177	1177	1177	1177
01Jan2000 1900				844.9	1158	1158	1158	1158
01Jan2000 1910				831.6	1140	1140	1140	1140
01Jan2000 1920				818.5	1122	1122	1122	1122
01Jan2000 1930				805.6	1104	1104	1104	1104
01Jan2000 1940				792.9	1087	1087	1087	1087
01Jan2000 1950				780.4	1070	1070	1070	1070
01Jan2000 2000				768.1	1053	1053	1053	1053
01Jan2000 2010				756.0	1036	1036	1036	1036
01Jan2000 2020				744.1	1020	1020	1020	1020
01Jan2000 2030				732.3	1004	1004	1004	1004
01Jan2000 2040				720.8	988	988	988	988
01Jan2000 2050				709.4	972	972	972	972
01Jan2000 2100				698.3	957	957	957	957
01Jan2000 2110				687.3	942	942	942	942
01Jan2000 2120				676.4	927	927	927	927
01Jan2000 2130				665.8	912	912	912	912
01Jan2000 2140				655.3	898	898	898	898
01Jan2000 2150				644.9	884	884	884	884
01Jan2000 2200				634.8	870	870	870	870
01Jan2000 2210				624.8	856	856	856	856
01Jan2000 2220				614.9	843	843	843	843
01Jan2000 2230				605.2	830	830	830	830
01Jan2000 2240				595.7	816	816	816	816
01Jan2000 2250				586.3	804	804	804	804
01Jan2000 2300				577.1	791	791	791	791
01Jan2000 2310				568.0	778	778	778	778
01Jan2000 2320				559.0	766	766	766	766
01Jan2000 2330				550.2	754	754	754	754
01Jan2000 2340				541.5	742	742	742	742
01Jan2000 2350				533.0	731	731	731	731
02Jan2000 0000				524.6	719	719	719	719