PARKLET PROGRAM GUIDELINES

Creating Community Space: Converting Pavement to Parks

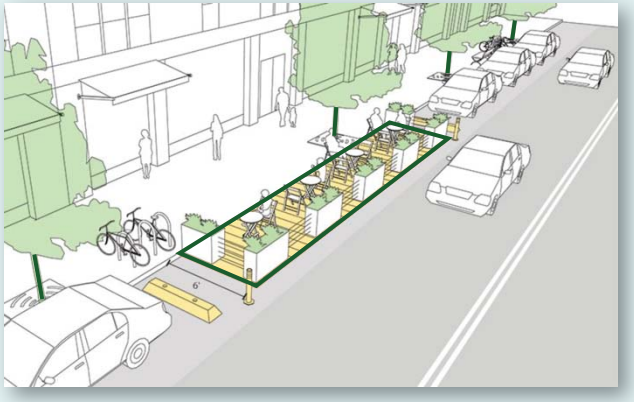

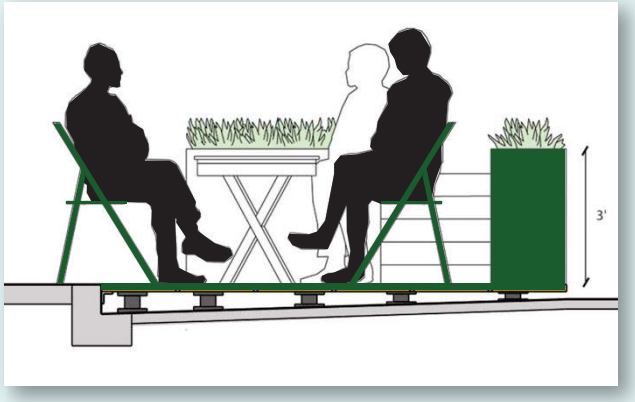

Graphics from National Association of City Transportation Officials

Contra Costa County
Department of Conservation
and Development

Contra Costa County
Public Works
Department

November 2016

Creating Community Space

TABLE OF CONTENTS

INTRODUCTION 5

The Beginning 5

What Is a Parklet? 5

About This Manual 5

Program Goals 7

PARKLET DESIGN STANDARDS 9

Parklet Location 9

Parklet Design 12

Additional Parklet Requirements 21

PERMITTING PROCESS 25

Permitting Process Flow Chart 26

Application Content 28

Plans 29

Site Plan Example 30

Maintenance Agreement 31

Duration of Parklet Construction 31

Parklet Monitoring 31

Removal of Approved Parklet 31

EXHIBITS AND RESOURCES 32

Application Package Checklist 33

Parklet Application 34

Operation, Maintenance, and Indemnification Agreement 35

Note: Photos taken by Mary Halle and Larry Leong, unless noted otherwise.

Introduction

INTRODUCTION

The Beginning

In 2014, Contra Costa residents and community groups from the El Sobrante area recognized that there is a common desire to integrate recreational areas and community spaces within urban or commercial zones. A great deal of inspiration for these urban recreational areas was derived from the parklet programs that have been established in large cities such as San Francisco, Oakland, and New York City. These residents and community groups reached out to the Contra Costa Board of Supervisors and voiced their desire to assist with establishing a parklet program in the unincorporated areas of the County. As a result, the Board of Supervisors, Public Works Department staff, and Department of Conservation and Development staff collaborated with various stakeholders to develop the Contra Costa County Parklet Program which was adopted by the Board of Supervisors in 2016. With this program in place, there is now a resource and procedure available to aid residents of the County in creating safe and aesthetically pleasing parklets in their community.

What Is a Parklet?

Parklets are small sidewalk extensions intended to provide amenities, green space, or recreational areas to the public. They are usually constructed to encompass the area of a typical parking space(s), and are open to any member of the public. The purpose of community parklets is to maximize a sense of community by utilizing public spaces for aesthetic amenities to create features of interest or opportunities for informal gatherings.

About This Manual

This manual is intended to provide a guide for residents, business owners or other interested parties who would like to establish a parklet in the unincorporated area of the County, as well as for County staff who will assist the parklet sponsor in the permitting process. This manual provides information on the standard design regulations and the steps required to obtain a parklet permit. The manual is intended to be a resource to all parties involved in the

CAFFÈ ROMA
VINI · PANINI · CAPPUCCINO
PIZZETTE · CANNOLI · TIRAMISU
caffè Roma
DOLCI · GELATI · VINI · PANINI
ATM INSIDE
Caffè Roma
Caffè Roma
HOTEL
San Fra

Establishment of a parklet, regardless of whether the sponsor is early in the design stage, or having an existing parklet reviewed for renewal.

Program Goals

Urban Green Space: As Contra Costa County continues to thrive, urban areas continue to emerge and grow to accommodate the needs of both residents and visitors. Parklets have great potential for providing green and/or recreational spaces in the heart of the County's vital urban areas, which can enhance aesthetic values and provide areas for community building.

Encourage Increased Pedestrian Activity: Parklets provide areas of interest along pedestrian corridors and places for pedestrians to rest and interact with others within the community.

Support for Local Business: Although parklets are open to the public and cannot be established solely for the benefit of an adjacent business, parklets tend to draw attention to adjacent establishments and provide areas that can be utilized by patrons.

Parklet Design Standards

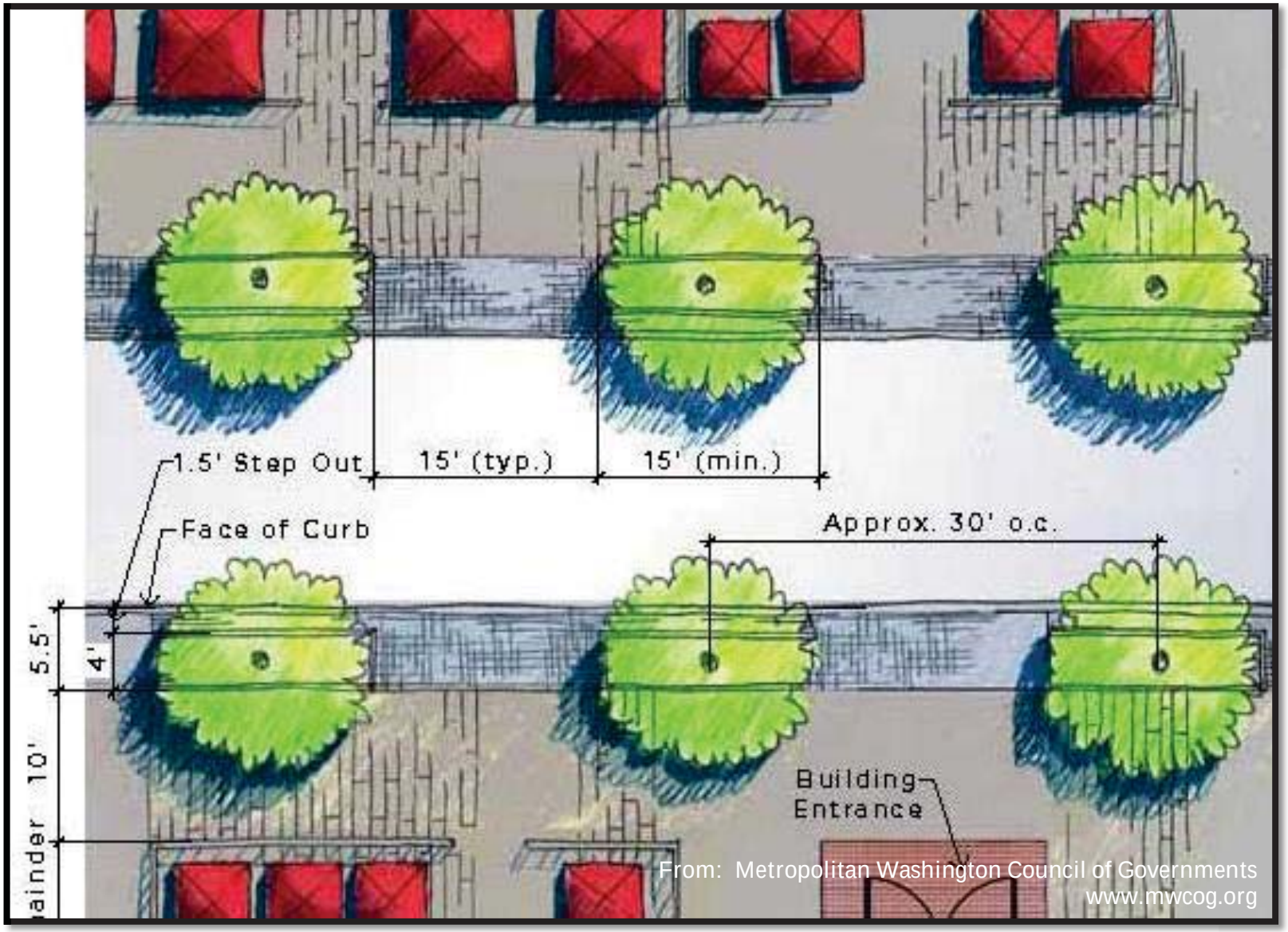

From: Metropolitan Washington Council of Governments
www.mwcog.org

PARKLET DESIGN STANDARDS

Parklet Location

Identifying an appropriate location for a parklet is the key to successful implementation.

1. Right-of-Way: A parklet in the public right- of-way must be available for use by the general public. In addition, the location within the public right of way requires the applicant to obtain a permit to construct and operate in the public right of way. A parklet proposed within private roadways or on private property requires an alternate review and approval process.

2. Designated On-Street Parking Areas: A parklet shall only be located in designated on-street parking areas.

3. Posted Speed Limit: A parklet may be established along roadways where the posted speed limit is 25 mph or less. A parklet is allowed on streets where the posted speed is greater than 25 mph only if the Public Works Department determines that safety concerns have been addressed by the applicant. Careful review of speed surveys, collision data, roadway geometrics, fortified railing design, sight distance, and other factors will be required at these locations. An additional deposit may be required for these locations as additional staff time will be required.

4. Traffic Volume and Collision History: If a parklet is proposed on roadways with an Average Daily Traffic (ADT) count exceeding 10,000 vehicles, an additional deposit may be required as additional staff time may be required. Parklets proposed at locations with a significant collision history may also require additional review.

5. Corner Location (see Figure 1): A parklet shall not block sight distance of motorists at intersections or driveways. Accordingly, a parklet may not be located less than 25 feet from a roadway intersection (see Figure 1 below and County Standard Plan CA10). The final distance required may vary based on the surrounding roadway conditions, and shall be subject to the approval of the Public Works Department.

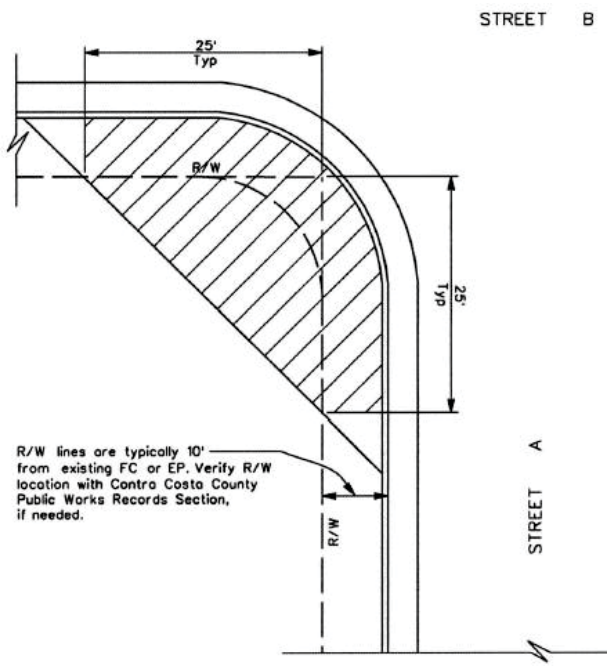

Figure 1: Sight Triangle at Corners (see CA10)

6. <u>Driveways (see Figure 2</u>): A parklet shall not be placed within 25 feet of an adjacent driveway or other points of off-street access which require line of sight standards as required by the Public Works Department. The final location of a parklet will vary based on the proposed parklet design, and shall be subject to review and approval.

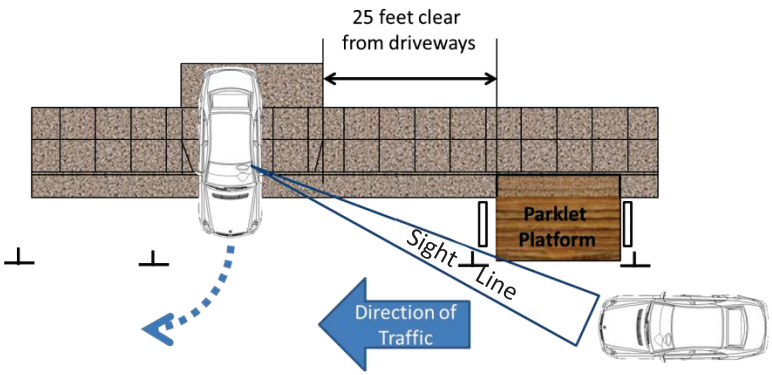

Figure 2: Driveway Clearance

7. <u>Longitudinal Slope</u>: Parklets are prohibited on streets where the longitudinal slope exceeds 5 percent (see Figure 3). When installed on a street with a longitudinal slope of three percent or greater, a parklet must include a wheelchair rest area.

Figure 3: Slope Diagram

8. **Parking Zones**: Parklets are prohibited in (disabled and no parking zones. Parklets may be permitted within loading, short-term and commercial loading/unloading zones on a case by case basis provided that the parklet will not create a safety hazard or adversely impact surrounding land uses.

9. **Utilities**: A parklet may not cover or impede access to any utility equipment, utility pole, fire hydrant, parking permit kiosk, or utility access such as manhole covers, drainage inlets, and equipment shelters. Additional setbacks from any of the above utility improvements and access points may be required to comply with the respective utility provider's standards.

10. **Public Transit (see Figure 4)**: A parklet may not be located within a bus zone or impede access to a public transit stop (i.e. bus, light rail, or train, stop).

11. **Minimum Parking Requirement:** Parklet site selection must consider the overall parking need for the surrounding area and/or business district.

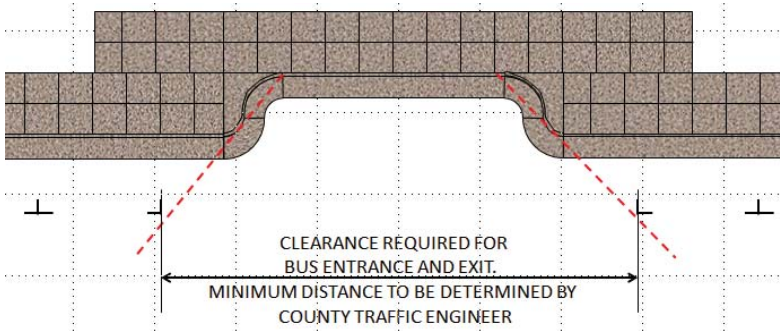

Figure 4 (Above): Parklet at Bus Turnout

Parklet Design

A parklet design shall at minimum meet the following design standards.

1. <u>Parking Areas</u>: A parklet shall be located within designated on-street parking areas.

   a. <u>Length in On-Street Parking Areas (Figure 5)</u>: When replacing on-street parking, a parklet shall be the length (dimension measured parallel to curb) of at least one (1) parking space or a minimum of 12 feet in unmarked parking areas.

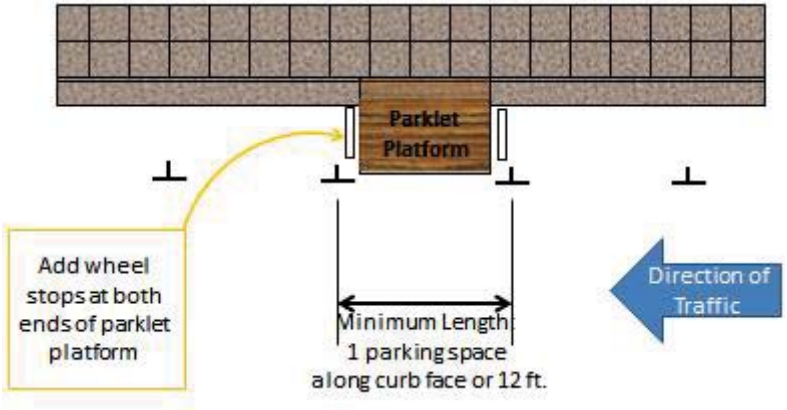

Figure 5: Parklet in Parallel Parking Spot

   b. <u>Length in Diagonal Parking Areas (Figure 6)</u>: When replacing diagonal on-street parking, a parklet shall be the length of at least two (2) parking spaces.

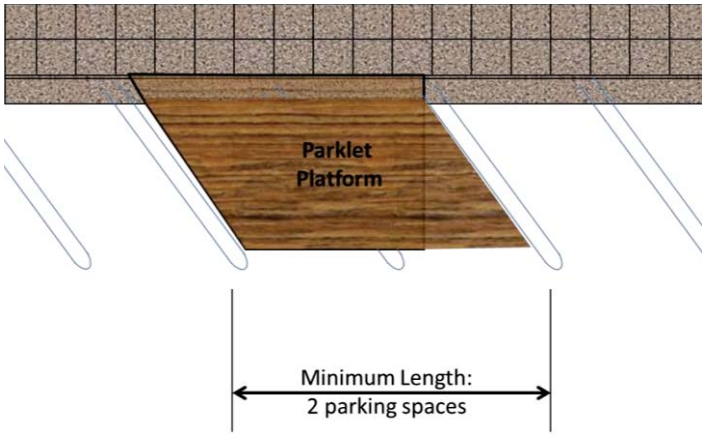

Figure 6: Parklet in Angled Parking Spots

   c. <u>Length within Perpendicular Parking Areas (Figure 7)</u>: When replacing perpendicular on-street parking, a parklet shall be the length of at least two (2) parking spaces.

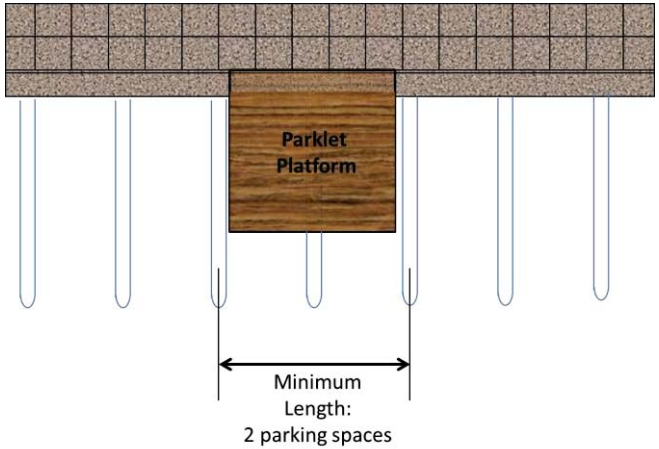

Figure 7: Parklet in Perpendicular Parking Spots

d. <u>Optimized Parking Spaces</u> Parklet installation shall not leave an adjacent space that is too small to accommodate less than one full parking space.

e. <u>Emergency Fire Access</u>: A parklet structure shall not exceed 32 feet in length (dimension measured parallel to the curb) unless a break or separation of at least four feet is provided to allow for emergency access from the traffic lane to sidewalk areas.

f. <u>Parklet Depth (See Figure 8)</u>: The depth (dimension measured perpendicular to curb) of a parklet shall be no less than the minimum dimension required to meet ADA accessibility requirements. Portions of the required parklet depth may be located within an existing sidewalk area as long as the sidewalk encroachment does not reduce the pedestrian path of travel to a width of less than 4.5 feet in the public right of way.

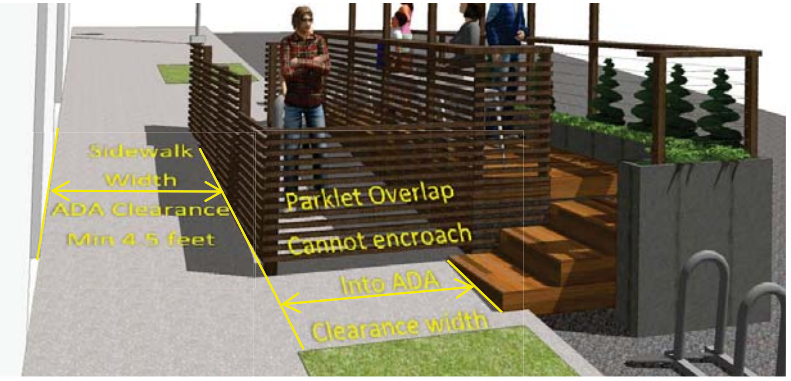

Figure 8: Parklet Depth and Sidewalk Clearance

2. <u>Fortified Railing (see Figure 9)</u>: A parklet shall include an element of the parklet enclosure that addresses public safety and provides a barrier or fortified railing between moving vehicles and

parklet users. The design specifications of the barrier will depend on the design speed of the adjacent roadway, and must be approved by the Public Works Department.

Figure 9: Samples of Fortified Railing/Barrier

3. <u>Reflective Corner Elements (see Figure 10)</u>: The four corners of a parklet shall have a reflective element or other clearly visible design feature, such as a soft-hit post, bollard, or raised pavement marker, to illuminate the parklet at night and signify the parklet envelope.

Figure 10: Sample Reflective Corner Elements

4. <u>Wheel Stops (see Figure 11)</u>: In parallel parking areas, a 3-foot-long wheel stop shall be installed at each boundary between the parklet and the adjacent parking space. The wheel stop shall be installed so that it begins one foot away from the curb. A wheel stop shall be adequately secured to the roadway surface in a manner approved by the Public Works Department.

Figure 11: Sample Wheel Stop

5. <u>ADA Compliance</u>: A parklet shall comply with applicable Americans with Disabilities Act (ADA) accessibility standards. Compliance with ADA standards is required with respect to design elements of the parklet, as well as for adjacent areas that may be impacted by the parklet (e.g.

sidewalk areas). Loose materials such as sand, gravel, or loose stones are prohibited for use as a walking surface within a parklet.

6. <u>Wheelchair Accommodations</u>: A parklet shall have a minimum of one wheelchair resting area, one wheelchair turning space, and one companion seat. In a parklet where tables, counters, or drink rails are provided, at least one of the amenities shall be wheelchair accessible in terms of height and knee clearance. Figures 12–15 are samples from the 2010 ADA Standards that may apply to your parklet design.

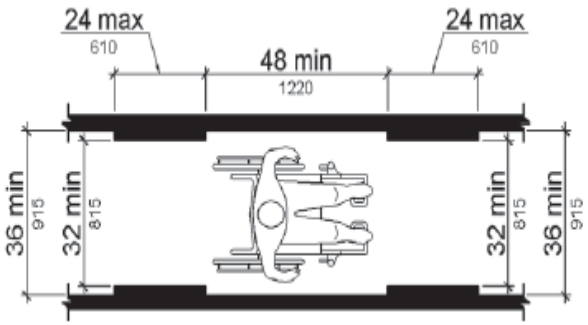

Figure 12: Clear Width of an Accessible Route
(ADA 2010 Figure 403.5.1)

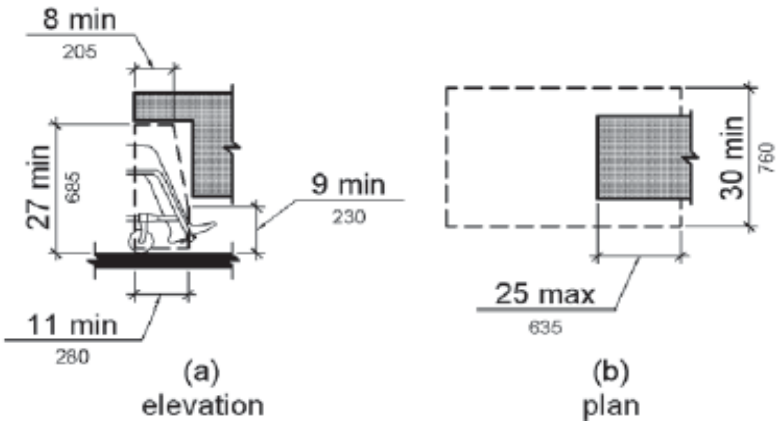

Figure 13: Knee Clearance
(ADA 2010 Figure 306.3)

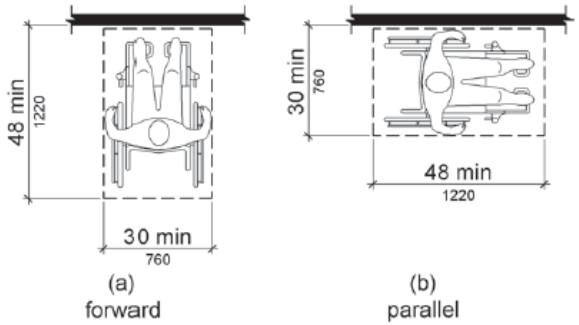

Figure 14: Position of Clear Floor or Ground Space
(ADA 2010 Figure 3.5.5)

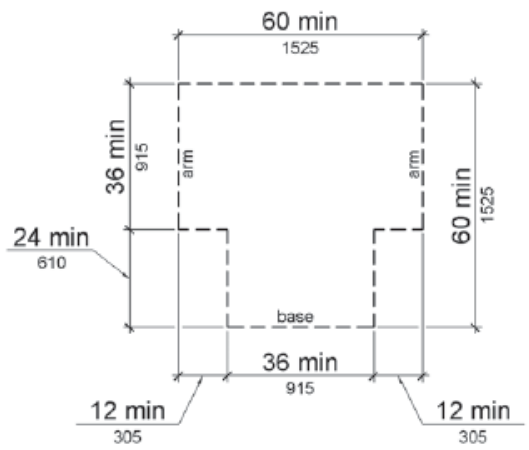

Figure 15: T-Shaped Turning Space
(ADA 2010 Fig. 304.3.2)

7. **Building Permit Compliance**: A parklet shall be subject to and comply with the California Building Code.

8. **Platform Surface**: The top of a parklet platform shall be flush with the sidewalk grade. A cover, expansion joint, or other type of connector between the parklet surface and curb may also be required if necessary to provide a safe transition surface. If the platform base is not solid, the space underneath the platform surface must be accessible for maintenance through access panels, removable pavers, or other method.

   To avoid a tripping hazard and achieve ADA compliance, a maximum elevation/height difference of ¼ inch should be maintained between the curb and parklet platform.

   A parklet platform shall be secured in place to prevent movement of the parklet structure. A parklet platform shall be secured to the existing street or curb by bolting or other method approved by the Public Works Department.

9. **Drainage (see Figure 16)**: A parklet may not impede the flow of curbside drainage nor cover an existing drainage inlet. A parklet shall allow for conveyance of curbside drainage, in accordance with the Public Works Department's standards.

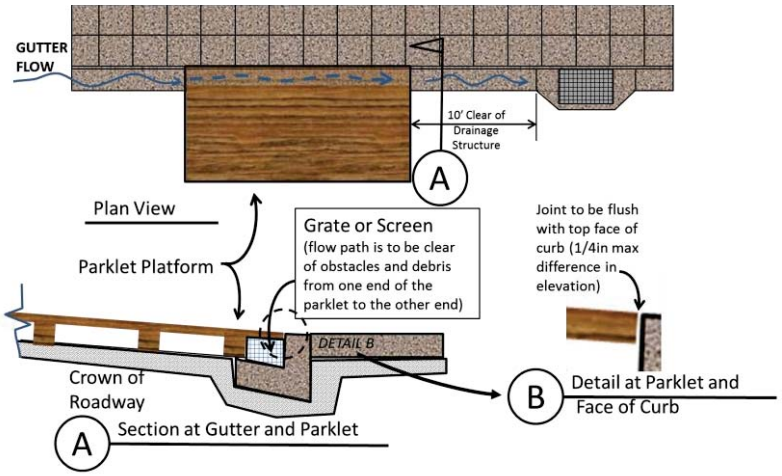

Figure16: Parklet Drainage

10. <u>Cross Slope</u>: The cross slope (direction perpendicular to the street) of the parklet platform surface shall not exceed 2 percent.

11. <u>Buffer</u>: A parklet shall have an enclosure, structure, edge, or other buffer between parklet users and the adjacent traffic lane. This may take the form of planters, railings, cabling, or other appropriate buffer that is structurally fortified to meet the approval of the Public Works Department and DCD Building Inspection Division.

12. <u>Public Parklet Sign (see Figure 17)</u>: A parklet shall have a minimum of two Public Parklet Signs indicating the hours of operation, and that the parklet is to be publicly accessible at all times during posted parklet hours. A parklet shall be "closed" during the overnight hours. A Public Parklet Sign shall be at least 2 square feet in area. The location and design of the Public Parklet Signs shall be subject to review and approval by the County. No other signs, logos, or advertising are permitted within or on a parklet except for small plaques recognizing the parklet sponsor, material donors, and other contributors.

Figure 17: Sample Parklet Sign

13. <u>Traffic Lane (see Figure 18)</u>: A parklet must be located so that the traffic lane adjacent to the parklet has a minimum of 15 feet in width. The required 15-foot lane is intended to provide a 12-foot-wide traffic lane and an additional buffer for

bicyclists as well as a general buffer for safety. No portion of a parklet structure shall protrude, cantilever, or otherwise encroach within the adjacent traffic lane or any delineated bike route.

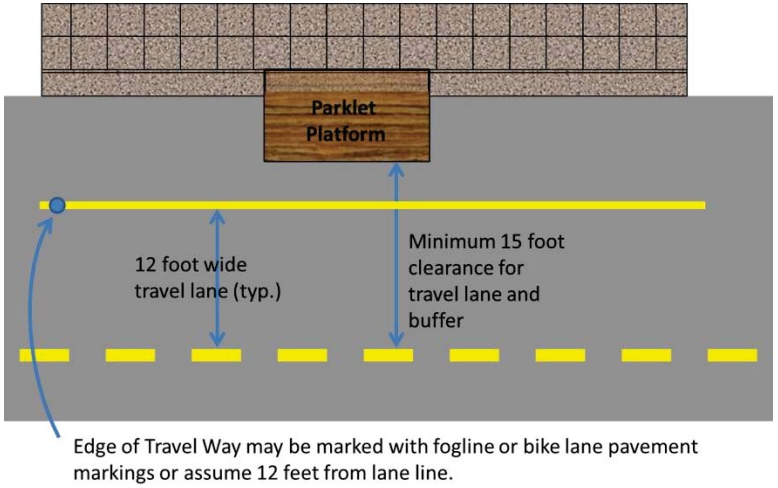

Figure 18: Parklet Clearance from Travel Lane

14. **Bike Route Accommodation**: The parklet site selection and design shall give consideration to avoid impacts to bike routes.

15. **Sidewalk Access**: A parklet may not reduce, encroach within, or otherwise block a designated pedestrian path or sidewalk to a width of less than 4.5 feet.

16. **Points of Entry**: A parklet enclosure that includes a front (sidewalk side) wall shall have no less than two points of entry.

17. **Weight**: No parklet structure may weigh more than 200 pounds per square foot.

18. **Seating**: Some form of permanent seating is encouraged for incorporation in all parklet designs. Individual seating (e.g. chairs and stools) is preferred rather than bench seating as it discourages sleeping in the parklet. If permanent bench seating is used, the area below the bench shall be enclosed or otherwise made inaccessible to deter sleeping in that area.

19. **Trash Receptacle**: The parklet sponsor is responsible to furnish and service at least one permanent trash receptacle. Exceptions to this requirement may be allowed if a permanent trash receptacle is available on the sidewalk within 30 feet of the parklet.

20. **Height** (**see Figure 19**): A parklet's walls or railing shall not have a continuous height that exceeds 42 inches and shall not block views in or out of the parklet. Columns or other vertical framing for overhead elements are permitted.

However, a building permit must be obtained from the Building Inspection Division at DCD for any parklet enclosure that will include a roof, cover, or other type of overhead element. An overhead element shall maintain a minimum height of 84 inches between the parklet platform surface and the lowest point of the overhead element.

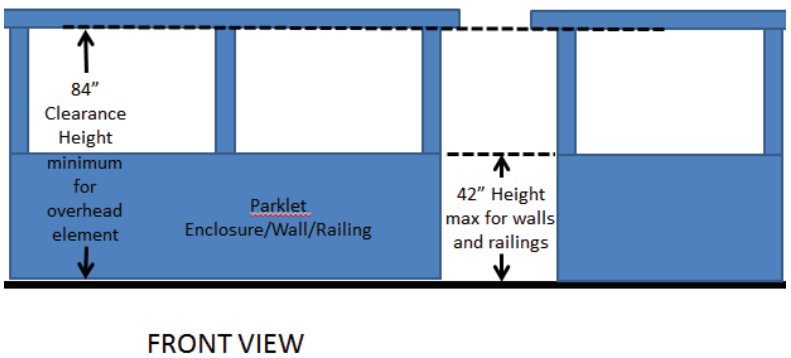

Figure 19: Parklet Wall Height and Overhead Dimensions

21. **Beautification Element (see Figure 20)**: All parklet designs shall include a beautification element such as landscaping, artwork, or innovative architecture to improve the aesthetics of the parklet.

Figure 20: Sample Parklets with Beautification Elements

Additional Parklet Requirements

1. **Authorization:** Prior to submitting an application for a parklet, the parklet sponsor shall obtain written authorization from the fronting property owner (in the event the applicant is not the owner of the fronting property), and written support from owners of the adjacent property owners.

2. **Building Permit:** In the event that the proposed parklet will include a roof, cover, or other type of overhead element, the parklet sponsor shall obtain a building permit from the Department of Conservation and Development, Building Inspection Division prior to constructing the parklet. A separate application and fee will be required for issuance of the building permit.

3. **Liability Insurance:** A parklet sponsor must maintain no less than $1 million in liability insurance throughout the term of the parklet permit, in accordance with the Parklet Sponsor Operation, Maintenance, and Indemnification Obligations.

4. **Removal Deposit:** Prior to construction of a parklet and as a condition of parklet permit issuance, the parklet sponsor shall submit a cash deposit to the County in an amount the County determines is necessary to pay for the cost to remove the parklet and restore the right of way at the end of the parklet permit term. If the parklet sponsor abandons the parklet prior to the end of the parklet permit term, or refuses to remove the parklet upon request or termination of the parklet permit, the County will utilize the cash deposit to pay for the parklet removal costs.

Photo: Michael Macor, The Chronicle

STORE
Newbill

5. **Operation, Maintenance, and Indemnification Obligations:** The parklet sponsor must agree to the terms of the Parklet Sponsor Operation, Maintenance, and Indemnification Obligations provided under the Exhibits and Resources Section of this manual. Those obligations will be conditions of the parklet permit. If the parklet sponsor fails to comply with any of the obligations or any condition of approval of the parklet permit, the County may terminate the parklet permit and require the parklet to be removed.

   a. **Parking Meters**: All parking meters located within the area in front of a proposed parklet shall be removed prior to use of the approved parklet. The cost for removal of parking meters shall be borne by the parklet sponsor, and supervised by staff of the Public Works Department.

   b. **Amplified Sound**: No audio systems or other sound amplification devices are permitted for incorporation in the design of any parklet, and shall not be used on any parklet.

   c. **Parklet Design Changes**: Proposed changes to elements of the parklet design such as color, materials, and size; shall require review by the County and Board-approved MAC, if applicable, prior to implementation.

   d. **Smoking**: No smoking or vaping is permitted within a parklet at any time.

   e. **Alcohol**: The consumption of alcohol is not permitted within a parklet at any time. This includes alcoholic beverages that may be available for purchase from an establishment located on the Fronting Property.

Permitting Process

PERMITTING PROCESS

General Steps in the Permit Process:

1. Pre-application meeting – An Applicant should bring a site map of the location and a sketch of the conceptual design to a pre-application meeting with Public Works Department staff. This step is intended to provide initial feedback regarding site location and design to determine parklet feasibility. Nothing is submitted at this time but photos and sketches are helpful in discussion.
2. Initial Application submittal:
    a. Site map showing all site constraints such as driveways, bus stops, utilities, sight line, existing on street parking opportunities and map of surrounding drainage patterns
    b. Signed acceptance of concept by fronting and adjacent property owners
    c. $1,200 deposit
    d. Acknowledgment that proof of $1 million liability insurance and performance deposit will be due prior to permit issuance.
3. Initial Application review – Contra Costa Departments of Public Works and Conservation and Development (DCD) will review the initial application to determine whether the general location and concept are acceptable. If the County accepts the proposed location and concept, the applicant may prepare a full design submittal for the proposed parklet.
4. Full application submittal – In addition to items provided initial application, detailed design drawing should include: ADA compliance, railing or barrier design, beautification elements, drainage provisions, signage and description of operation. Payments should also be submitted including proof of insurance, performance deposit, and signed Parklet Sponsor Obligation form as well as proof of consultation with the local advisory group.

.

Permitting Process Flow Chart

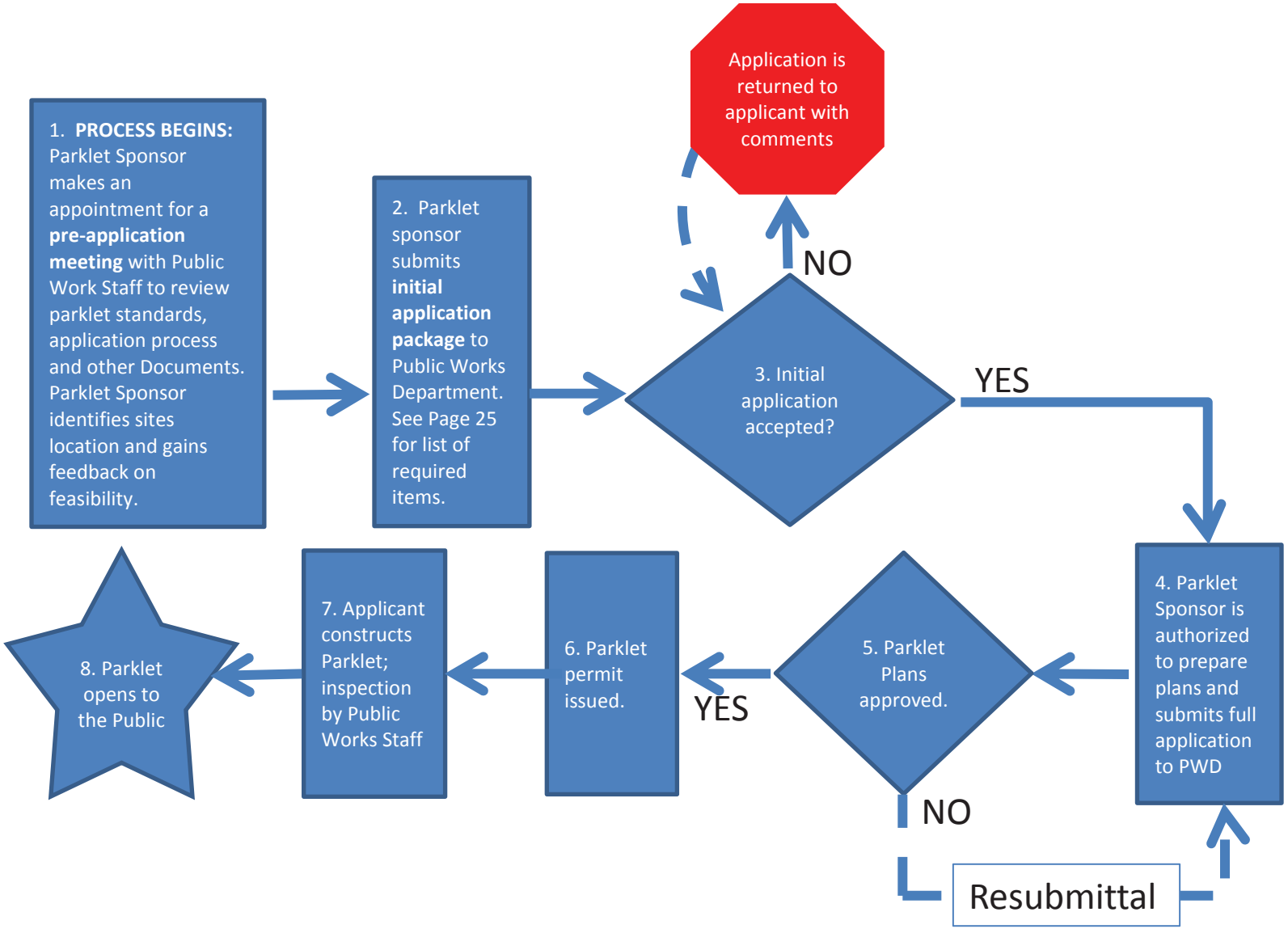

5. Detailed plan review – This step will require approximately eight weeks to complete. The parklet sponsor should allow time in their schedule; assuming plans will be reviewed and commented upon twice (four weeks to review each submittal) for a total review time of eight weeks.

6. Upon adequate resolution of all review comments and satisfaction of all conditions, insurance and deposits, a permit will be issued.

7. Applicant will construct the parklet with inspection by the Public Works Department. Parklet sponsor or their representative shall notify the Public Works Inspector for site visits as indicated in the conditions of the Parklet Permit.

8. Parklet is open to the public. The permit to operate the parklet will terminate two years following the opening of the parklet at which time the applicant may submit for renewal of the parklet permit which will require a simple one page application to extend the term of the permit and a reduced deposit to cover the cost for staff review.

Application Content: Application For a parklet permit shall include the following:

- Completed and signed application
- Written authorization from adjacent business /property owners
- Parklet plans
- Photographs of existing site conditions
- Copy of Public Works Department drainage inventory map
- Drainage assessment of stormwater conveyance to verify that the parklet will not impede stormwater flow.
- Insurance certificate with County listed as additional insured with a $1 million limit.
- Cash Performance Deposit in the amount the County determines is necessary to cover the cost of parklet removal and restoration of the right of way in the event that the parklet sponsor abandons the parklet and public funds must be used to restore the area.
- A cash deposit of $1,200 to fund staff time to review and inspect parklet plans and site construction. If design is complex or site conditions are not optimum, such that additional time will be required for review, the applicant must deposit additional funds to provide for the increased resources required.
- Proof of consultation with the local Municipal Advisory Council or similar community outreach in the area of the project.

Plans: All parklet plans shall include a site plan (see page 30), elevation view, cross section, and construction details

Submitted Plans shall at a minimum include the following:

- Name, type, and location of adjacent businesses
- Adjacent property lines
- Parklet location and dimensions
- Proposed parklet structure (enclosure) dimensions, materials, finishes
- Detailed plans of proposed fortified enclosure or other barrier, verifying it meets minimum safety standards for site conditions.
- Drainage assessment
- Required parklet setbacks or clearances.
- Existing parking spaces and striping with dimensions
- Adjacent auto, bike, and bus traffic lanes
- Location and type of adjacent colored curbs
- Sidewalk location and width within public right of way
- Curb cuts and driveways
- Existing parking meters
- Existing utilities on sidewalk and street (e.g. street lights, fire hydrants, man holes, power poles, etc.)
- Existing trees or other landscaped areas
- Location for required bollards and wheel stops
- Location of any existing utility easements
- Location and type of proposed landscaping and any required irrigation
- Sidewalk slope and parklet cross slope

Site Plan Example

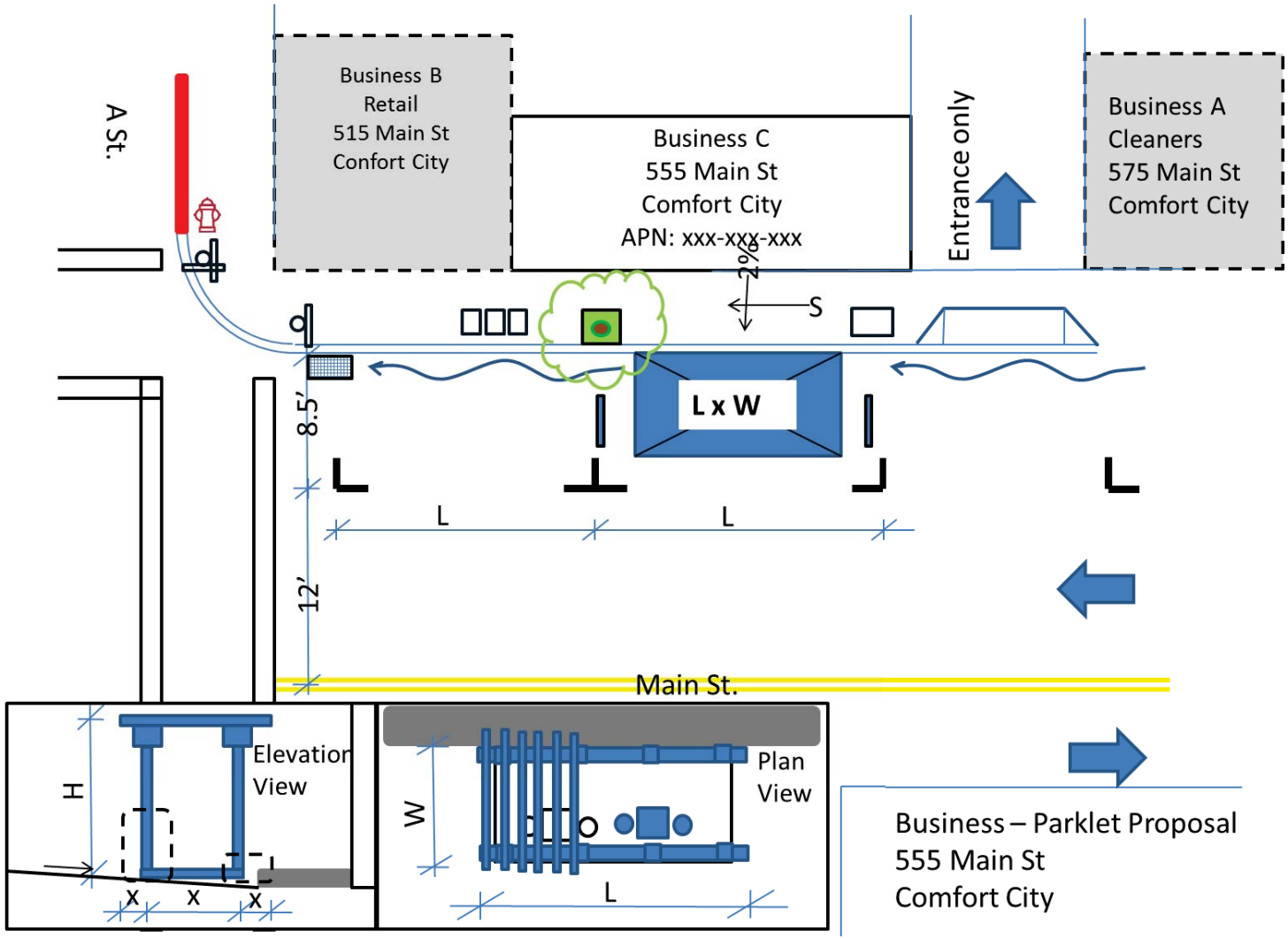

Maintenance Agreement: A parklet permit is a type of road encroachment permit which allows construction within the road right of way. Upon issuance of the parklet permit, the parklet sponsor must agree to the terms for maintenance of the parklet (see Appendix for sample Maintenance Agreement).

Duration of Parklet Construction: The applicant shall complete construction of the approved parklet within 3 months of the issuance date of the permit. If the Public Works Director finds there is a delay in completing the parklet construction or other lack of urgency by the applicant, the Director may terminate the permit and restore the right-of-way to its former condition.

Parklet Monitoring: Throughout the parklet use, all public comments, complaint calls, or other communications regarding the approved parklet shall be directed to the Public Works Department for documentation within the respective parklet encroachment permit file.

Removal of Approved Parklet: The Public Works Director may require removal of the parklet if the applicant has failed to maintain the parklet or comply with any applicable conditions or if the parklet is causing a disturbance or public safety concern in the surrounding area. In this event, the applicant must remove the parklet and return the right of way to original condition or the performance deposit will be used to have the right of way restored.

Exhibits and Resources

APPLICATION PACKAGE SUBMITTAL CHECKLIST

1. **Application Form**: Please submit the completed and signed application.

2. **Parklet Permit Deposit**: The applicant shall submit a deposit of $1,200 to cover staff time for the review, coordination, and inspection of the parklet design and construction. Any unused portion of the deposit fund that remains at the conclusion of the permit process will be returned to the applicant. Similarly, additional payment may be required if the application review expenses exceed 100% of the initial deposit.

3. **Site plan**: The applicant shall provide a detailed site plan that is drawn to scale and that shows the footprint of the proposed parklet installation. Please consult the "Parklet Plan Checklist" for a list of the required parklet site plan elements.

4. **Photos of existing site**: Please submit photos of the location where you would like to install the parklet, including the parking spaces, the sidewalk, and building façade in front of the proposed location. Please consult the "Initial Specific Plan Checklist" for required photo perspectives.

5. **Initial Concept Description**: A brief summary explaining your project goals and the vision for your parklet. Why have you chosen this location? What activities would you like to promote on the parklet? How do you anticipate the community will be involved in the creation and use of the new parklet?

6. **Community feedback on Parklet Design**: Prior to permit approval, the applicant must submit the parklet application to the Board-appointed Municipal Advisory Council (MAC) for review and comment. If a MAC does not exist in the area of the project, please consult Public Works staff on whether outreach can be conducted with other community groups in the area.

7. **Letter of Authorization** from fronting and adjacent property owner(s) (see description on Page 21)

Contra Costa County Parklet Application

PARKLET INFORMATION

Address of Proposed Parklet: _____ Zip: _____

Cross Street: _____

APPLICANT INFORMATION

Applicant/Organization: _____

Mailing Address: _____ Zip: _____

Contact Name: _____ Signature: _____

Phone 1: _____ Date: _____

FRONTING PROPERTY INFORMATION/AUTHORIZATION

Fronting Property Address: _____ Zip: _____

Name (s) of Property Owner: _____ Signature: _____

Property Owner Mailing Address: _____ Zip: _____

Phone: _____ Date: _____

ADJACENT PROPERTY OWNER INFORMATION/AUTHORIZATION

Adjacent Property Address: _____

Adjacent Property Owner(s): _____ Signature: _____

Adjacent Property Owner Mailing Address: _____

Phone: _____ Date: _____

ADJACENT PROPERTY OWNER INFORMATION/AUTHORIZATION

Adjacent Property Address: _____

Adjacent Property Owner(s): _____ Signature: _____

Adjacent Property Owner Mailing Address: _____

Phone: _____ Date: _____

DRAFT

PARKLET SPONSOR OBLIGATIONS

OPERATION, MAINTENANCE, AND INDEMNIFICATION

1. PARKLETS MUST BE OPEN TO THE PUBLIC

The parklet sponsor shall keep the parklet free and open to all members of the public, regardless of whether or not they patronize any particular business. The parklet sponsor shall ensure that table service from any adjacent business establishment is not provided within the parklet, and condiments, napkins, or other items distinctly associated with an adjacent business are not placed on the parklet tables. However, if tables are placed in the parklet, the parklet sponsor shall be responsible for clearing and cleaning each table after each use, to ensure it remains clean and well maintained.

2. INDEMNIFICATION

(a) The County is under no obligation to maintain or repair the parklet, and these obligations shall not be construed to impose any such obligation on the County.

(b) To the maximum extent permitted by law, the parklet sponsor shall defend, indemnify, save, and hold harmless the County, its governing board, officers, agents, and employees ("indemnitees") from any and all demands, losses, claims, costs, suits, liabilities, and expenses for any property damage, personal injury, or death arising directly or indirectly from or connected with the design construction, use, operation, or maintenance of the parklet by the parklet sponsor or the presence or existence of the parklet, except for claims, costs, or liabilities resulting from the sole negligence or sole willful misconduct of the County. If any action or proceeding is brought against any of the indemnitees, the parklet sponsor shall reimburse the indemnitees for any expenditures, including reasonable attorney's fees and costs, incurred by the indemnitees, and if requested by any of the indemnitees, shall defend the action or proceeding at the parklet sponsor's sole expense with counsel acceptable to the indemnitees.

3. UPKEEP, MAINTENANCE, & REPAIR

(a) The parklet sponsor shall keep the parklet well maintained and in good condition. The parklet sponsor shall ensure that the parklet is swept at least once per week, kept free of debris, dirt, and graffiti, and that any plants within the parklet are maintained in good health.

(b) The parklet sponsor shall keep the sidewalk area adjacent to the parklet clean and well maintained in an effort to eliminate tripping and slipping hazards, such as cracked or uneven sidewalk. The parklet sponsor shall be solely responsible for paying all costs to repair and maintain the portion of the sidewalk adjacent to the parklet.

(c) The parklet sponsor shall be responsible for removing, as frequently as necessary, any trash that collects within the parklet to maintain a trash-free parklet. The parklet sponsor shall also be responsible for removing any trash that collects within the public right-of-way within 25 feet of the parklet.

(d) If an errant motorist, vandalism, an act of any third party, an act of nature, or negligent maintenance by the parklet sponsor causes damage to the parklet, the parklet sponsor shall report the damage to the County and indicate the intended efforts to remedy the cause and either repair the parklet to the extent necessary to return the parklet to its initially approved design and condition, make modifications to the parklet to deter future damage, or to remove the parklet.

(e) Leaves and debris may collect beneath the parklet which can cause ponding of water or clogging of gutters. These conditions can cause odors or become a refuge for rodents and insects. The parklet sponsor shall be aware of these tendencies and take action to prevent odors or nuisance from rodents or insects to occur.

4. LIABILITY INSURANCE

At all times during the term of the parklet permit, the parklet sponsor shall maintain no less than $1 million in liability insurance coverage under a policy that names the County and its officers and employees as additional insureds. No later than five days after the parklet sponsor's receipt of a notice of cancellation, notice of intention to cancel, notice of lapse of insurance coverage, or notice of material change to the insurance coverage, the parklet sponsor shall provide the County a copy of that notice. If the sponsor fails to provide the County a copy of the notice as required under the preceding sentence, or fails to maintain the insurance coverage required by this paragraph, then, at County's sole discretion, the County may revoke the parklet permit and order the removal of the parklet.

5. NO PROPERTY INTEREST

The parklet permit issued by the County to the parklet sponsor does not convey, nor shall it be construed as conveying, any property interest to the parklet sponsor. The parklet sponsor shall not assert against the County or any other person any claim of property interest to or within the County right-of-way based on its possession of a parklet permit, or based on the occupancy of the County right-of-way by its parklet.

6. TERMINATION OF PARKLET PERMIT

(a) If the parklet sponsor fails to meet any of the obligations contained herein, or any term or condition of approval of the parklet permit, the County, at its sole discretion, may terminate that permit.

(b) Upon the expiration or termination of a parklet permit, the parklet sponsor shall remove the parklet from the County right-of-way and return the surface of the right-of-way to the condition it was in before the parklet was installed.

(c) If the parklet sponsor fails or refuses to remove the parklet within 30 days after the parklet permit terminates or expires, the County, at its sole discretion, may draw upon or claim against the removal deposit or other security provided by the parklet sponsor as a condition of parklet permit approval; and the County may use those funds to pay the cost of removing the parklet from the County right-of-way.

Parklet Sponsor Signature: _____ Date: _____

Parklet Sponsor Name: _____

Parklet Address: _____

Encroachment Permit #: _____